SVR ENGINEERING COLLEGE

AYYALURUMETTA, NANDYAL,-518502,A.P

(Approved by AICTE, New Delhi & Affiliated to JNTUA, Anantapuramu)

DEPARTMENT OF MECHANICAL ENGINEERING

Engineering Workshop Lab Manual (R23)

SVR ENGINEERING COLLEGE

AYYALURUMETTA, NANDYAL,-518502,A.P

(Approved by AICTE, New Delhi & Affiliated to JNTUA, Anantapuramu)

DEPARTMENT OF MECHANICAL ENGINEERING

Engineering Workshop Lab Manual (R23)

Name:_____

Reg. No:_____

Year/Semester:_____

Academic Year:_____

SVR ENGINEERING COLLEGE

AYYALURU METTA, NANDYAL,-518502,A.P

(Approved by AICTE, New Delhi & Affiliated to JNTUA, Anantapuramu)

DEPARTMENT OF MECHANICAL ENGINEERING

Engineering Workshop Lab Manual (R23)

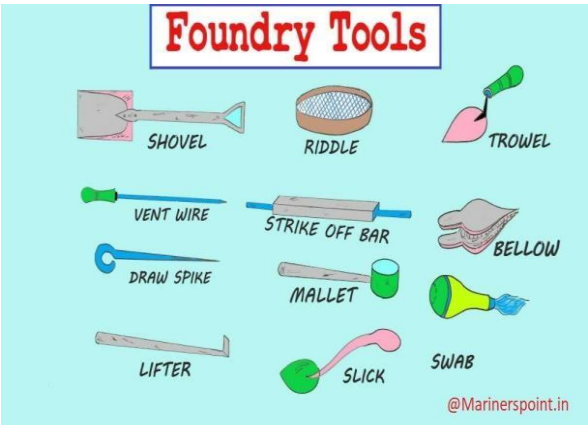

SVR ENGINEERING COLLEGE

AYYALURU METTA, NANDYAL,-518502,A.P

(Approved by AICTE, New Delhi & Affiliated to JNTUA, Anantapuramu)

DEPARTMENT OF MECHANICAL ENGINEERING

VISION

To raise the quality of education and to be an effective human resource development section under all changing conditions.

To contribute to the growth of the engineering profession maintaining highest ethical and professional standards.

Mission

The mission of the Department is to provide an excellent and comprehensive education with practical knowledge in the field of Mechanical engineering which in turn mould students for a wide range of careers and to exhibit a high level of professionalism, ethical behaviour and exercise social responsibility.

Program Outcomes (POs):

Engineering Graduates will be able to:

1. **Engineering knowledge:** Apply the knowledge of mathematics, science, engineering fundamentals, and an engineering specialization to the solution of complex engineering problems.

2. **Problem analysis:** Identify, formulate, review research literature, and analyze complex engineering problems reaching substantiated conclusions using first principles of mathematics, natural sciences, and engineering sciences.

3. **Design/development of solutions:** Design solutions for complex engineering problems and design system components or processes that meet the specified needs with appropriate consideration for the public health and safety, and the cultural, societal, and environmental considerations.

4. **Conduct investigations of complex problems:** Use research-based knowledge and research methods including design of experiments, analysis and interpretation of data, and synthesis of the information to provide valid conclusions.

5. **Modern tool usage:** Create, select, and apply appropriate techniques, resources, and modern engineering and IT tools including prediction and modeling to complex engineering activities with an understanding of the limitations.

6. **The engineer and society:** Apply reasoning informed by the contextual knowledge to assess societal, health, safety, legal and cultural issues and the consequent responsibilities relevant to the professional engineering practice.

7. **Environment and sustainability:** Understand the impact of the professional engineering solutions in societal and environmental contexts, and demonstrate the knowledge of, and need for sustainable development.

8. **Ethics:** Apply ethical principles and commit to professional ethics and responsibilities and norms of the engineering practice.

9. **Individual and team work:** Function effectively as an individual, and as a member or leader in diverse teams, and in multidisciplinary settings.

10. **Communication:** Communicate effectively on complex engineering activities with the engineering community and with society at large, such as, being able to comprehend and write effective reports and design documentation, make effective presentations, and give and receive clear instructions.

11. **Project management and finance:** Demonstrate knowledge and understanding of the engineering and management principles and apply these to one's own work, as a member and leader in a team, to manage projects and in multidisciplinary environments.

12. **Life-long learning:** Recognize the need for, and have the preparation and ability to engage in independent and life-long learning in the broadest context of technological change.

Program Educational Objectives(PEOs):

PEO1: To prepare students to excel in undergraduate programmer/ technical profession.

PEO2: To provide students with a solid foundation in mathematical, scientific and engineering fundamentals required to solve engineering problems and also to pursue higher studies.

PEO3: To train students with good scientific and engineering breadth so as to comprehend, analyze, design, and create novel products and solutions for the real life problems through practical experience in workshop and machines laboratory.

PEO4: To inculcate in student's professional and ethical attitude, effective communication skills, team work skills, multidisciplinary approach and an ability to relate engineering issues to broader social context.

Program Specific Outcomes(PSOs):

PSO1: Enhancing the employability skills by making the students capable of qualifying National level competitive examinations.

PSO2: Inculcating in students technical competencies to deal with practical aspects of mechanical engineering.

ENGINEERING WORKSHOP
(Common to all branches)

Course Objective:

To familiarize students with wood working, sheet metal operations, fitting and electrical house wiring skills

Course Outcomes:

After completion of this lab the student will be able to
CO1.Identify workshop tools and their operational capabilities
CO2.Practice on manufacturing of components using workshop trades including fitting, carpentry, foundry and welding.
CO3. Apply fitting operations in various applications.
CO4. Apply basic electrical engineering knowledge for house wiring practice circuit connections.
CO5. Demonstrate soldering and brazing.

SYLLABUS:

1. Demonstration: Safety practice and precautions to be observed in workshop

2. Wood Working:
Familiarity with different types of woods and tools used in wood working and make following joints
a) Half – Lap joint b) Mortise and Tenon joint c) Corner Dovetail joint or Bridle joint

3. Sheet Metal Working:
Familiarity with different types of tools used in sheet metal working, Developments of following sheet metal job from GI sheets. a)Tapered tray b) Conical funnel c) Elbow pipe d) Brazing

4. Fitting:
Familiarity with different types of tools used in fitting and do the following fitting exercises
a)V-fit b) Dovetail fit c) Semi-circular fit d) Bicycle tire puncture and change of two wheeler tyre .

5. Electrical Wiring:
Familiarities with different types of basic electrical circuits and make the following connections
a) Parallel and series b) Two way switch c) Godown lighting d) Tube light e) Three phase motor
f) Soldering of wires .

6. Foundry Trade:
Demonstration and practice on moulding tools and processes,preparation of Green Sand Moulds for given patterns.

7. Welding Shop:
Demonstration and practice on Arc Welding and Gas Welding, preparation of Lap joint and Butt joint.

8. Plumbing
Demonstration and practice of plumbing tools, preparation of pipe joints with couplings for same diameter and with reducer for different diameters.

LIST OF EXPERIMENTS

I. DEMONSTRATION:

Safety practice and precautions to be observed in workshop

II. WOOD WORKING

1. Half – Lap joint
2. Mortise and Tenon joint
3. Corner Dovetail joint or Bridle joint

III. SHEET METAL WORKING

1. Tapered tray
2. Conical funnel
3. Elbow pipe
4. Brazing

IV. FITTING

1. V-fit
2. Dovetail fit
3. Semi-circular fit
4. Bicycle tire puncture and change of two wheeler tyre.

V. ELECTRICAL WIRING

1. Parallel and series
2. Two way switch
3. Go down lighting
4. Tube light
5. Three phase motor
6. Soldering of wires

VI. FOUNDRY TRADE

1. Single Piece Pattern
2. Split Piece Pattern

VII. WELDING SHOP

1. Lap Joint
2. Butt Joint
3. T-Joint

VIII. PLUMBING

1. Pipe Threading
2. Pipe Line to Wash Basin

INDEX

S.No	NAME OF THE EXPERIMENT	Date	Page No	Marks obtained	Signature of the faculty

INDEX

S.No	NAME OF THE EXPERIMENT	Date	Page No	Marks obtained	Signature of the faculty

1. Demonstration:
Safety practices and precautions to be observed in workshop.

Safety precautions

1. Read the operator's manual and observe all safety precautions for all equipment.
2. Protect yourself from electric shock. ...
3. Keep all guards and shields in place.
4. Give the task your full attention.
5. Let each tool work at its own speed; do not force it.
6. Always wear appropriate personal protective clothing.

If everyone follows workshop rules, everyone will be safe and learn how to use tools and equipment properly and efficiently.

1. Always listen carefully to the teacher and follow instructions.
The instructions given by your teacher, his / her demonstrations on the use of equipment and tools, will help you understand how to work in a workshop safely and efficiently.
2. Do not run / rush in the workshop.
You could 'bump' into another pupil and cause an accident. You could run into a machine or bench, which could cause a serious injury.
3. Know where the emergency stop buttons are positioned in the workshop.
If you see an accident at the other side of the workshop, you can use the emergency stop button to turn off all electrical power to the machines.
4. Always wear an apron.
It will protect your clothes and hold loose clothing such as ties in place. This will prevent loose clothing getting caught in a machine, pulling the machine operator into the moving parts.
5. Wear good strong shoes. Training shoes are not suitable.
Tools and equipment can have sharp edges and are usually heavy. Good shoes prevent damage to feet, if a piece of equipment or a tool, is dropped on feet.
6. When attempting practical work, all stools should be put away.
If stools are left out in the workshop during a practical session, they will get in the way and inevitably become a trip danger.
7. Bags should be stored away, during practical sessions in the workshop.
A person can easily trip over a bag left on the floor and accidentally push into someone using a machine. This could cause a serious accident.
8. When learning how to use a machine, listen very carefully to all the instructions given by the teacher. Ask questions, especially if you do not fully understand.
It is very important to ask questions, especially when learning how to use machines and tools, if there is a need to clarify instructions. Using a machine without a full understanding of its use, could easily lead to an accident.

9. Do not use a machine, if you have not been shown how to operate it safely, by your teacher.
It is extremely dangerous (and illegal), to use a machine in the workshop, without having followed and understood, all the teacher instructions.

10. Always be patient, never rush practical work.
The most productive and efficient 'craftspeople / engineers', work patiently and never rush their work. Working at a safe, steady pace, is how skilled professions complete their tasks.

11. Always use guards, when operating machines.
The guard on a machine, protects the user, especially the users eyes, from dangerous 'debris' that is thrown out, often at high speed. The guards also ensure that hands and fingers, are not near moving parts. A good example of a machine guard, is seen in front of the chuck, of a machine drill.

12. Keep hands / hair and clothing away from moving/rotating parts of machinery.
Loose Clothing (e.g. a school tie) and long hair, can be caught in the moving parts of a machine (e.g. the chuck of a drill). Hands / clothing should must be kept away, from the moving / rotating parts. Long hair should be tied back.

13. Use hand tools carefully, keeping both hands behind the cutting edge.
Never place a hand in front of a cutting tool (e.g. a chisel). There is always a possibility, of the tool slipping and the sharp edge slicing into the hand / fingers.

14. Report any damage / faults to machines/equipment. Damage or a faulty part, could cause an accident.
A broken or damaged tool can be dangerous. For example, a hammer with a loose hammer head ,should be reported to the teacher. It is always possible that the hammer head will 'fly off' the handle, when it is in use.

15. Keep your workbench tidy. When you have finished with a tool / piece of equipment, return it to its storage cupboard / rack.
A bench top, crowded with tools, will eventually lead to one or more, being knocked on to the floor, or on to feet. Tools are damaged easily and people can be injured.

16. Never distract another pupil, when they are working on a machine or using tools / equipment.
A distracted pupil could have an accident, as a distraction will take their focus and concentration away from the work they are doing. If using a tool / machine, a distraction can easily lead to an accident.

2. WOOD WORKING

INTRODUCTION:

Wood work or carpentry deals with making joints for a variety of applications like door frames, cabinet making furniture, packing etc.,

Timber:

Timber is a name obtained from well grown plants or trees. The timber must cut in such a way that the grains run parallel to the length. The common defects in timber are knots, wet rot, dry rot etc.

Market sizes of timber:-

Timber is sold in market in various standard shapes and sizes. They are:-

Log:-

The trunk of a tree, which is free from branches.

Balk:-

The log sawn to have roughly square cross section.

Post:-

A timber piece, round or square in cross section with more than 275 mm in width, 50 to 150 mm in thickness and 2.5 to 6.5 mm length.

Board:-

A sawn timber piece, below 175 mm in width and 30 mm to 50 mm in thickness.

Reapers:-

Sawn timber pieces of assorted and nonstandard sizes, which don't conform to the above shapes.

WORK HOLDING TOOLS:

Carpentry vice:-

It is a work holding device. When handle vice is turned in a clockwise direction, the sliding jar forces the work against the fixed sawn. The greater the force applied to the handle, the tighter to the work held.

Bar clamp:-

It is a rectangular (or) square block with V-groove on one or both sides opposite to each other. It holds cylindrical work pieces.

C-Clamp:-

This is used to hold work against an angle plate or V-block.

MARKING AND MEASURING TOOLS:

Try square:-

It is used for marking and testing the squareness of planed surfaces. It consists of a steel blade, fitted in a cast iron stock. It is also used for flatness. The size of a try square used for varies from 150 mm to 300 mm, according to the length of the blade. It is less accurate when compared to the try square used in fitting shop.

Marking gauge:-

It is a tool used to mark lines parallel to the edges of wooden pieces. It consists of a square wooden stem with a riding wooden stock on it. A marking pin, made of steel is fitted on the stem. A mortise gauge consists of two pins. In these it is possible to adjust the distance between the pins, to draw two parallel lines on the stock.

Fig : 1 steel rule

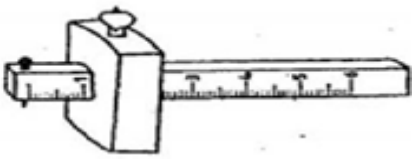

fig: 2 marking Gauge

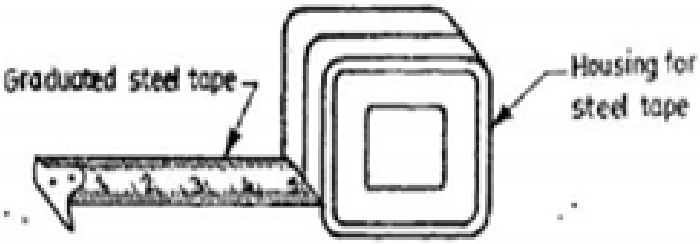

Fig: 3 steel tape

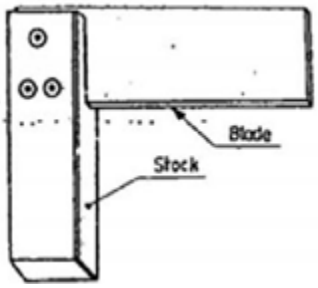

fig: 4 Try square

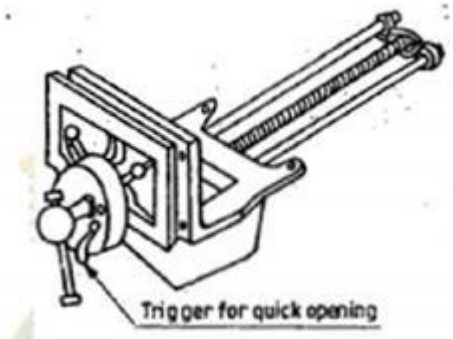

Fig: 5 corpenter vice

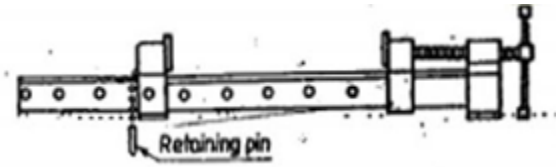

Fig: 6 Bar clamp

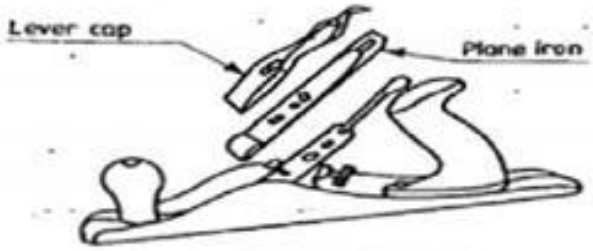

Fig: 7 metal jack plane

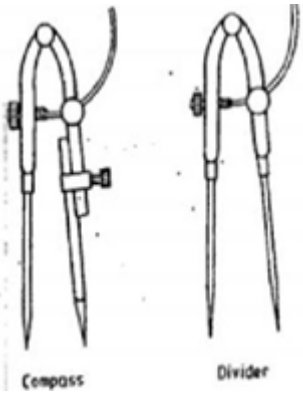

Fig: 8 compass and divider

Compass and dividers:-
This is used for marking circles, arcs, laying out perpendicular lines on the planed surface of the wood.

CUTTING TOOLS:

Hack saw:-
It is used to cross cut the grains of the stock. The teeth are so set that the saw kerfs will be wider than the blade thickness. Hard blades are used to cut hard metals. Flexible blades are having the teeth of hardened and rest of the blade is soft and flexible.

Chisels:-
These are used for removing surplus wood. Chisels are annealed, hardened and tempered to produce a tough shank and a hard cutting edge.

Rip saw:-
It is used for cutting the stock along the grains. The cutting edge of this saw makes a sleeper angle about 60o whereas that saw makes an angle of 45o with the surface of the stock.

Tenon saw:-
It is used for cutting tenons and in fine cabinet works. The blade of this saw is very thin and so it is used stiffed with back strip. Hence, this is sometimes called back saw. The teeth shapes similar to cross cut saw.

DRILLING AND BORING TOOLS:

Auger bit:-
It is the most common tool used for boring holes with hard pressure.

Gimlet:-
This is a hand tool used for boring holes with hand pressure.

Hand drill:-
Carpenters brace is used to make relatively large size holes, whereas hand drill is used for drilling small holes. A straight shank drill is used with these tools. It is small light in weight and may be conveniently used than the brace. The drill is clamped in the chuck.

MISCELLANEOUS TOOLS:

Ball peen hammer:-
It has a flat face, which is used for general work and a ball end is used for riveting.

Mallet:-
It is used to drive the chisel, when considerable force is to be applied, steel hammer should not be used for these purpose, as it may damage the chisel handle. Further, for better to apply a series of light taps with the mallet rather than a heavy single blow.

Claw hammer:-
It is a striking flat at one end and the claw at the others. The face issued to drive nails into wood and for other striking purpose and the claw for extracting nails out of wood.

Pinches:-
It is made of steel with a hinged and is used for pulling out small nails from wood.

Wood rasp file:-
It is a finishing tool used to make the wood smooth, remove sharp edge finishing fillets and other interior surfaces. Sharp cutting teeth are provided on its surface for the purpose. This file is exclusively used in wood work.

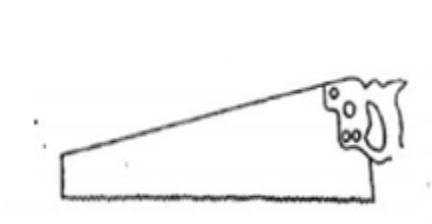

Fig: 9 cross cut saw

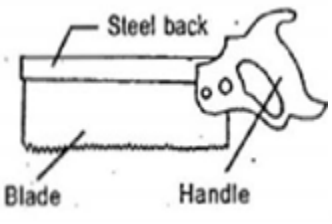

Fig: 10 Tenon saw

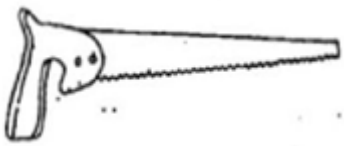

Fig: 11 compass saw

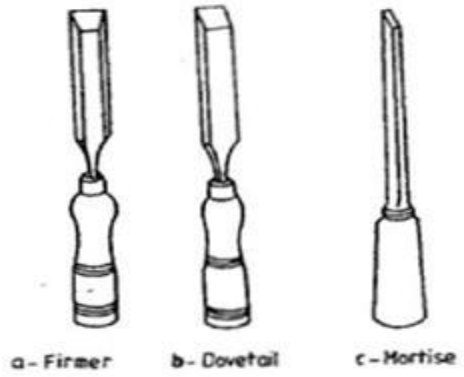

Fig: 12 Chisels

Fig: 13 Carpenter's brace

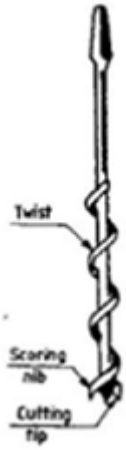

Fig: 14 Auger bit

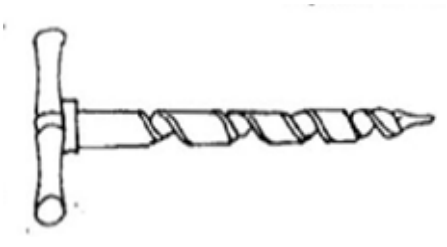

Fig: 15 Gimlet

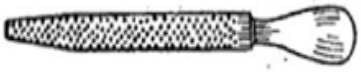

Fig: 16 wood rasp file

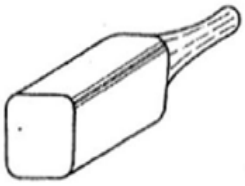

Fig: 17 Mallet

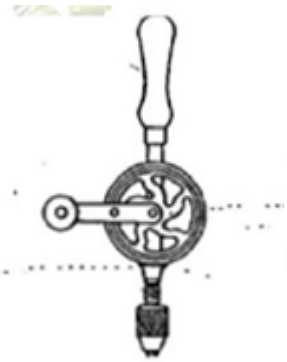

Fig: 18 Hand drill

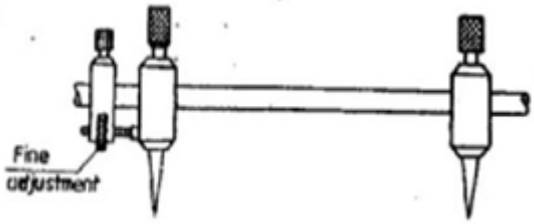

Fig: 19 Trammel

Fig: 20 Claw hammer

HALF-LAP JOINT

EXPERIMENT NO: **DATE:**

Aim: - To make a Half- lap joint.

Tools required: -

1. Carpenter's vice
2. Steel Rule
3. Try square
4. Jack plane
5. Scriber
6. Cross cut saw
7. Marking gauge
8. Firmer chisel
9. Mallet
10. Wood rasp file and smooth file

Material required: - Wooden pieces of size 225 x 50 x 35 mm–1 No.

Sequence of operations: -

1. Measuring and Marking
2. Planning
3. Check for squareness
4. Removal of extra material
5. Sawing
6. Chiseling
7. Finishing

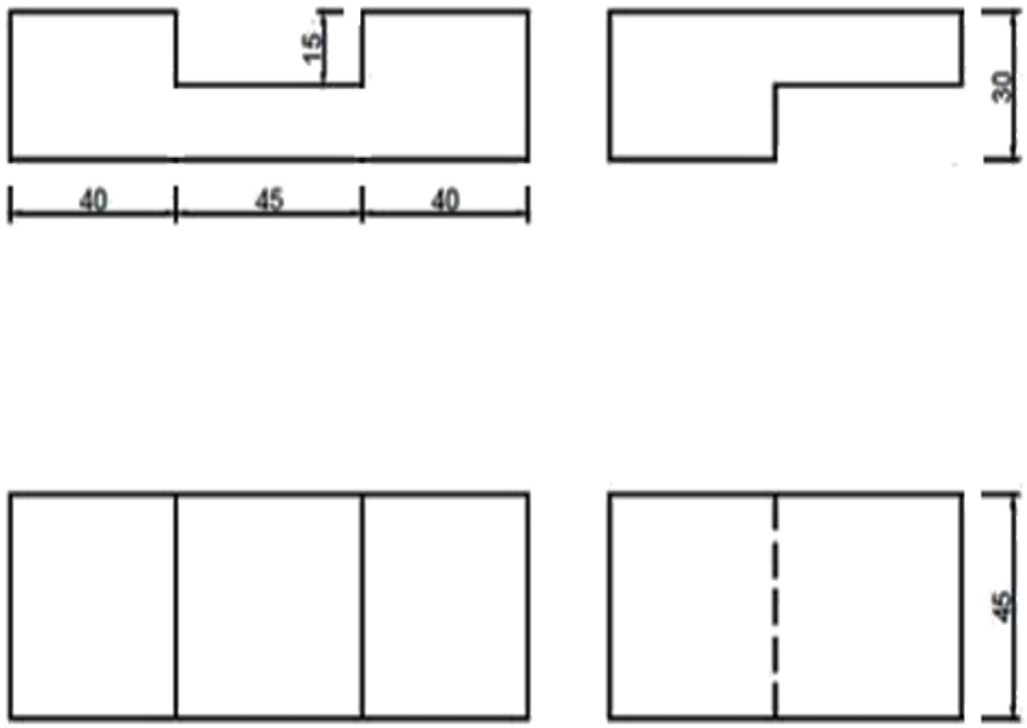

T-LAP JOINT

ALL DIMENTIONS ARE IN MM

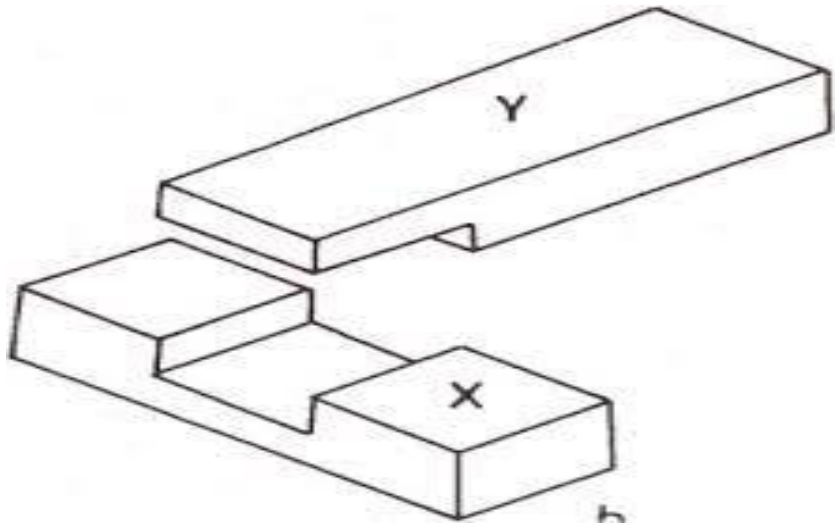

Procedure: -

1. The given reaper is checked for dimensions.
2. They are planed with jack plane and checked for straightness.
3. The two surfaces are checked for squareness with a try square.
4. Marking gauge is set and lines are marked at 30 and 45 mm to mark the thickness and width of the model respectively.
5. The excess material is first chiseled with firmer and then planned to correct size.
6. The mating dimensions of the parts X and Y are then marked using steel rule and marking gauge.
7. Using the crosscut saw, the portions to be removed are cut in both the pieces, followed by chiseling.
8. The ends of both the parts are chiseled to the exact lengths.
9. The fine finishing is given to the parts, if required so that, proper fitting is obtained.
10. The parts are fitted to obtain a slightly tight joint.

Safety precautions: -

1. Loose cloths are to be avoided.
2. Tools to be placed at their proper placed.
3. Hands should not be placed in front of sharp edged tools.
4. Use only sharp tools.
5. Care should be taken, when thumb is used as a guide in cross cutting and ripping.
6. Handle while chiseling, sawing and planning with care.

Result: - Half- lap joint is made as per the required dimensions.

MORTISE AND TENON JOINT

EXPERIMENT NO: **DATE:**

Aim: - To make a Mortise and Tenon joint.

Tools required: -

1. Carpenter's vice
2. Steel Rule
3. Try square
4. Jack plane
5. Scriber
6. Cross cut saw
7. Marking gauge
8. Firmer chisel
9. Mallet
10. Wood rasp file and smooth file

Material required: - Wooden pieces of size 225 x 50 x 35 mm–1 No.

Sequence of operations: -

1. Measuring and Marking
2. Planning
3. Check for squareness
4. Removal of extra material
5. Sawing
6. Chiseling
7. Finishing

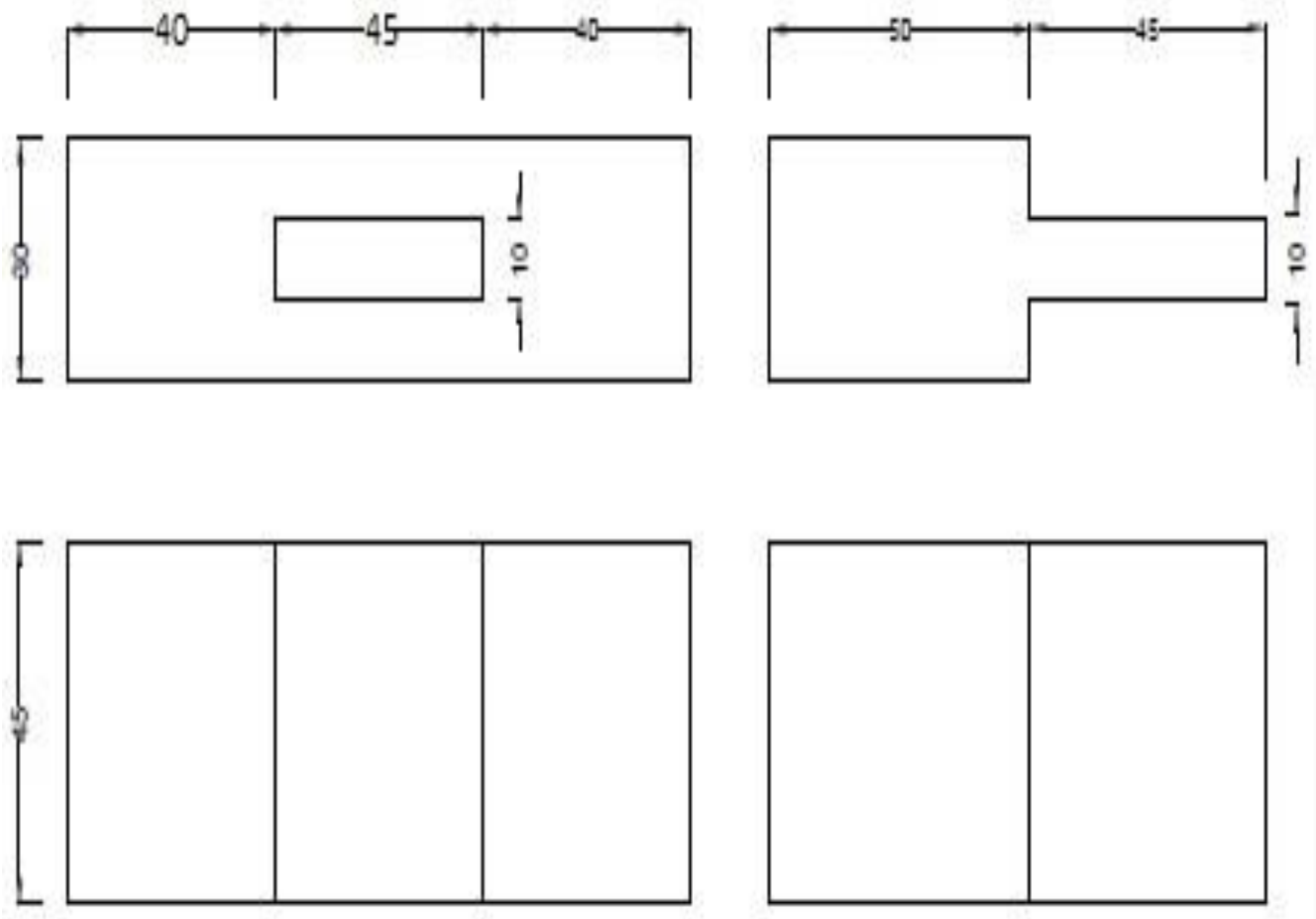

ALL DIMENSIONS ARE IN MM

Procedure: -

1. The given reaper is checked for dimensions.
2. They are planed with jack plane and checked for straightness.
3. The two surfaces are checked for squareness with a try square.
4. Marking gauge is set and lines are marked at 30 and 45 mm to mark the thickness and width of the model respectively.
5. The excess material is first chiseled with firmer and then planned to correct size.
6. The mating dimensions of the parts X and Y are then marked using steel rule and marking gauge.
7. Using the crosscut saw, the portions to be removed are cut in both the pieces, followed by chiseling.
8. The ends of both the parts are chiseled to the exact lengths.
9. The fine finishing is given to the parts, if required so that, proper fitting is obtained.
10. The parts are fitted to obtain a slightly tight joint.

Safety precautions: -

1. Loose cloths are to be avoided.
2. Tools to be placed at their proper placed.
3. Hands should not be placed in front of sharp edged tools.
4. Use only sharp tools.
5. Care should be taken, when thumb is used as a guide in cross cutting and ripping.
6. Handle while chiseling, sawing and planning with care.

Result: - Mortise and Tenon joint is made as per the required dimensions.

CORNER BRIDLE JOINT

EXPERIMENT NO: **DATE:**

Aim: - To make a Corner Bridle joint.

Tools required: -

1. Carpenter's vice
2. Steel Rule
3. Try square
4. Jack plane
5. Scriber
6. Cross cut saw
7. Marking gauge
8. Firmer chisel
9. Mallet
10. Wood rasp file and smooth file

Material required: - Wooden pieces of size 225 x 50 x 35 mm– 1 No.

Sequence of operations: -

1. Measuring and Marking
2. Planning
3. Check for squareness
4. Removal of extra material
5. Sawing
6. Chiseling
7. Finishing

CORNER BRIDLE JOINT

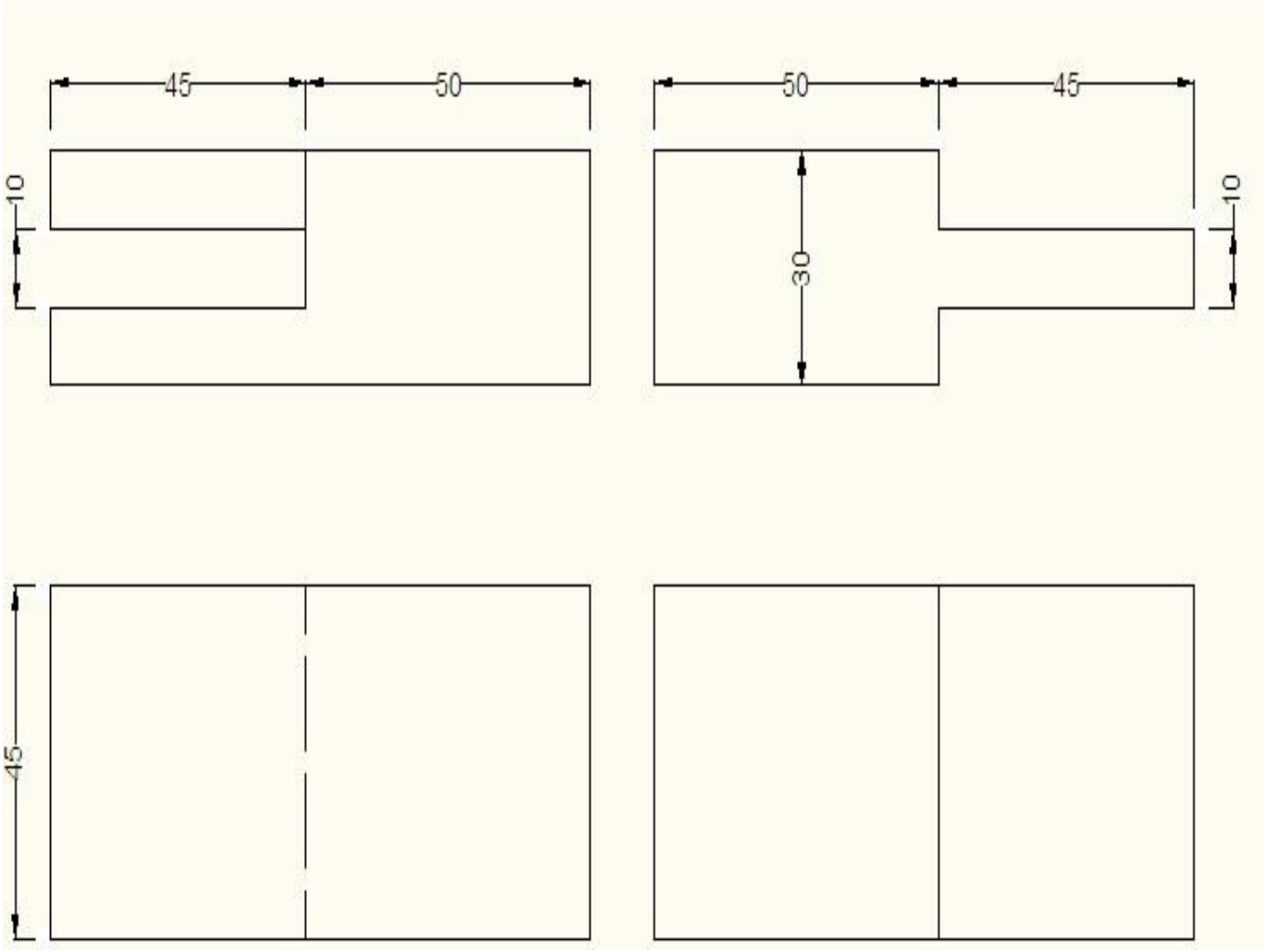

ALL DIMENSIONS ARE IN MM

Procedure: -

1. The given reaper is checked for dimensions.
2. They are planed with jack plane and checked for straightness.
3. The two surfaces are checked for squareness with a try square.
4. Marking gauge is set and lines are marked at 30 and 45 mm to mark the thickness and width of the model respectively.
5. The excess material is first chiseled with firmer and then planned to correct size.
6. The mating dimensions of the parts X and Y are then marked using steel rule and marking gauge.
7. Using the crosscut saw, the portions to be removed are cut in both the pieces, followed by chiseling.
8. The ends of both the parts are chiseled to the exact lengths.
9. The fine finishing is given to the parts, if required so that, proper fitting is obtained.
10. The parts are fitted to obtain a slightly tight joint.

Safety precautions: -

1. Loose cloths are to be avoided.
2. Tools to be placed at their proper placed.
3. Hands should not be placed in front of sharp edged tools.
4. Use only sharp tools.
5. Care should be taken, when thumb is used as a guide in cross cutting and ripping.
6. Handle while chiseling, sawing and planning with care.

Result: - Corner Bridle joint is made as per the required dimensions.

WOOD WORKING VIVA QUESTIONS

1. Name the commonly available shapes of timber in the market.
2. What is the sequence of operations in carpentry?
3. What is the difference between marking gauge and marking knife?
4. What is the difference C-clamp and bar cramp?
5. What for a plane is used in a carpentry shop?
6. Classify the planning tools.
7. Classify the chisels and their applications.
8. Name the tools used for pulling nails.
9. Name the various joinery materials used in carpentry.
10. Name the various types of joints.
11. Name some holding, marking, measuring, cutting, planning and finishing tools.

3. SHEET METAL WORKING

INTRODUCTION:

Many engineering and house hold articles such as boxes, cans, funnels, ducts etc., are made from a flat sheet of metals. These process being known as tin smithy. For this, the development of the article is first drawn on the sheet metal then cut and folded to form the required shape of the article. The edge of the articles are then secured through welding, brazing, soldering, riveting etc.

Sheet metal materials:-

A variety of metals used in a sheet metal shop such as black iron, aluminum and stainless steel. A sheet of soft steel which is coated with molten zinc is known as galvanized iron. The zinc coat forms a coating that resists rust, improves the appearance of the metal and permits it to be solderised with greater care.

Hand tools:-

The common hand tools used in sheet metals work are steel rule, usually of 60 cm length, Vise gauge, dot punch, scriber, trammels, ball peen hammer, and straight peen hammer, cross peen hammer, mallets, snips and soldering iron.

Trammels:-

Sheet metals layouts require marking of arcs and circles. This may be done by using the trammels. The length of the beam decides the maximum size of the arc that can be scribed.

Wire gauge:-

The thickness of the sheet metal is referred in numbers known as standard wire gauge (SWG). The gaps in the circumstance of the gauge are used to check the gauge number.

Bench shears:-

Sheet metal may be cut by shearing action. In this the force is applied through a compound lever, making it possible to cut sheet metal up to 4mm thick. The chopping hole can shear a mild steel rod up to 10mm diameter.

Snips:-

Snips are hand shears, varying in length from 200mm to 600mm. 200mm to 250mm being the commonly used. The straight lines are curved snips or bent snips are for trimming along inside curves.

Hammers:-

Ball peen hammer has a cylindrical slightly curved face and a ball head straight peen and similar to the cross peen, but it is positioned paralleled to the handle which can be used conveniently for certain operations of folding.

Stakes:-

Stakes are nothing but anvils, which are used as supporting tools and to form seam, bend, rivet sheet metal objects.

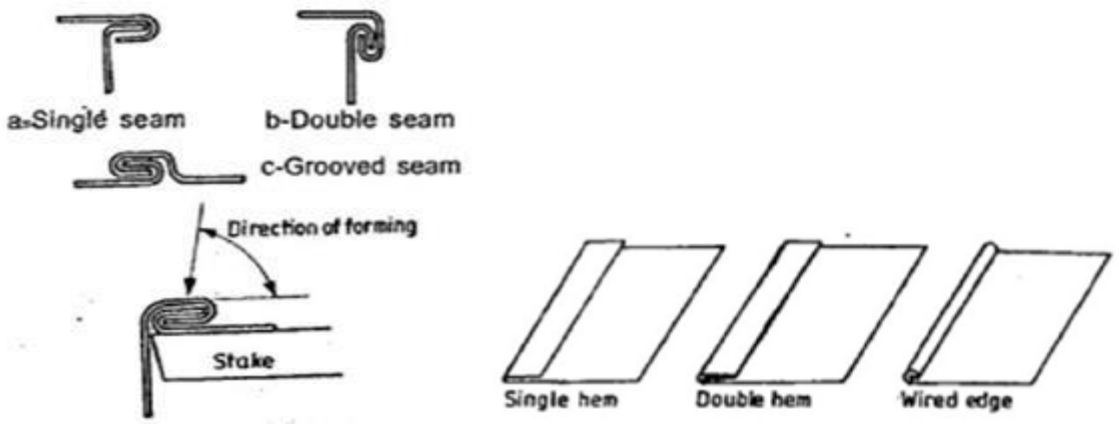

Fig: 1 Sheet metal joints

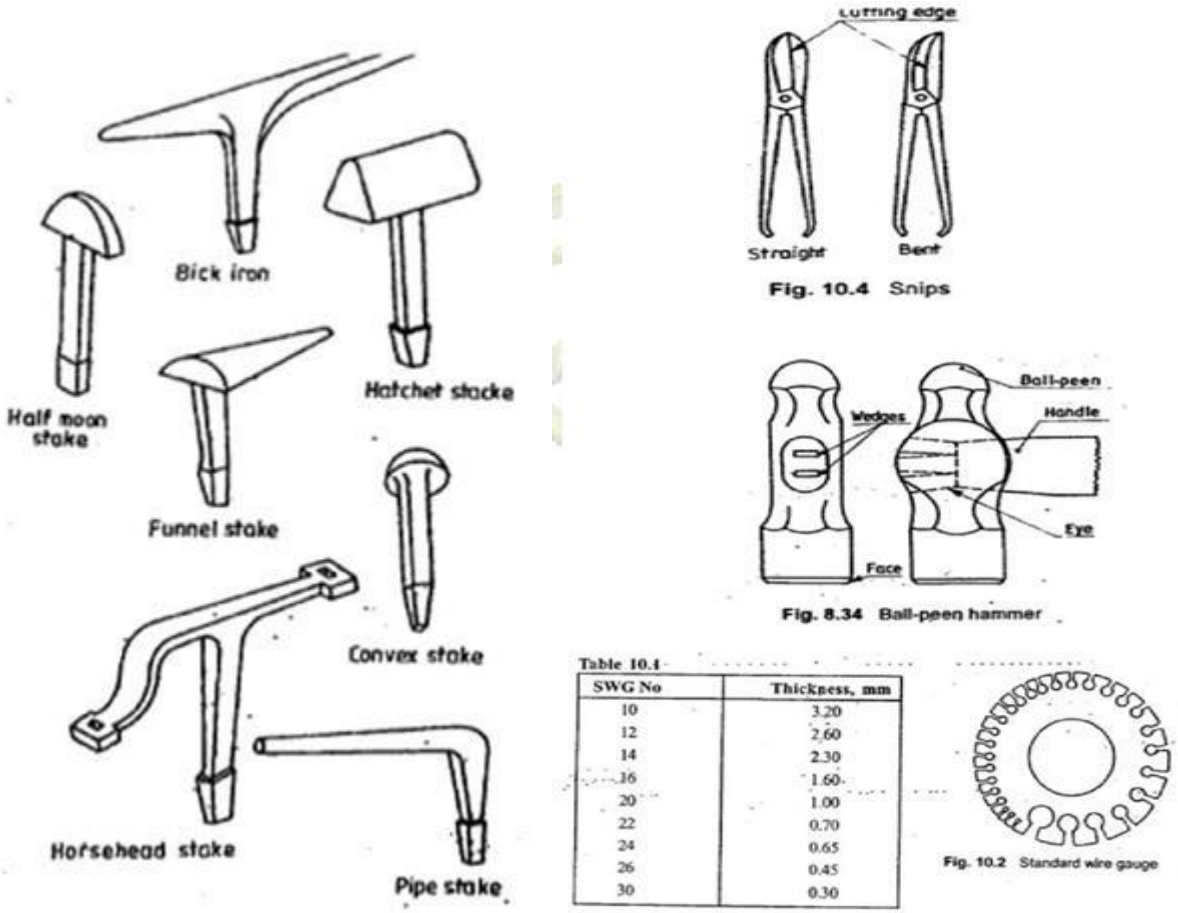

Fig: 2 Stakes

Snips:-
Snips are hand shears, varying in length from 200mm to 600mm. 200mm to 250mm being the commonly used. The straight lines are curved snips or bent snips are for trimming along inside curves.

Hammers:-
Ball peen hammer has a cylindrical slightly curved face and a ball head straight peen and similar to the cross peen, but it is positioned paralleled to the handle which can be used conveniently for certain operations of folding.

Stakes:-
Stakes are nothing but anvils, which are used as supporting tools and to form seam, bend, rivet sheet metal objects.

SHEET METAL JOINTS:

Various types of joints are used in sheet metal work to suit the varying requirement. These are self-secured joints, formed by joining together two pieces of sheets metal and using the metal itself to form the joints. These joints are to be used on sheets of less than 1.6mm thickness.

Riveting:-
Rivets are used to fasten two of more sheets of metal together. It is the common practice to use the rivets of the same material as that of the sheets having fastened.

Sheet metal screws:-
These are used in sheet metal work to join and install duct work for ventilation air conditioning etc. These screws are also known as self-tapping screws since they cut their own threads.

Soldering:-
Soldering is one method of joining two pieces of metal with an alloy that melts at a lower temperature than the metals to be joined for a good job. The metals to be joined must be free from dirt, grease and oxide. Solder is made of tin and lead in equal proportions. It comes either in the form of wire and bar.

Soldering iron:-
Soldering requires a source of heating. A common method of transmitting heat of the metal surfaces is by using a soldering iron.

TAPERED TRAY

EXPERIMENT NO: **DATE:**

AIM: - To make a tapered tray using the given G.I. Sheet.

TOOLS REQUIRED: -

1. Steel rule
2. Scriber
3. Straight snip
4. Bench vice
5. Stake
6. Cross peen hammer
7. Wooden mallet
8. Cutting pier

MATERIAL REQUIRED: - Galvanized Iron (G.I) sheet 110 x 125 mm size.

SEQUECE OF OPERATIONS:-

1. Cleaning
2. Surface leveling
3. Marking
4. Cutting
5. Folding

TRAY

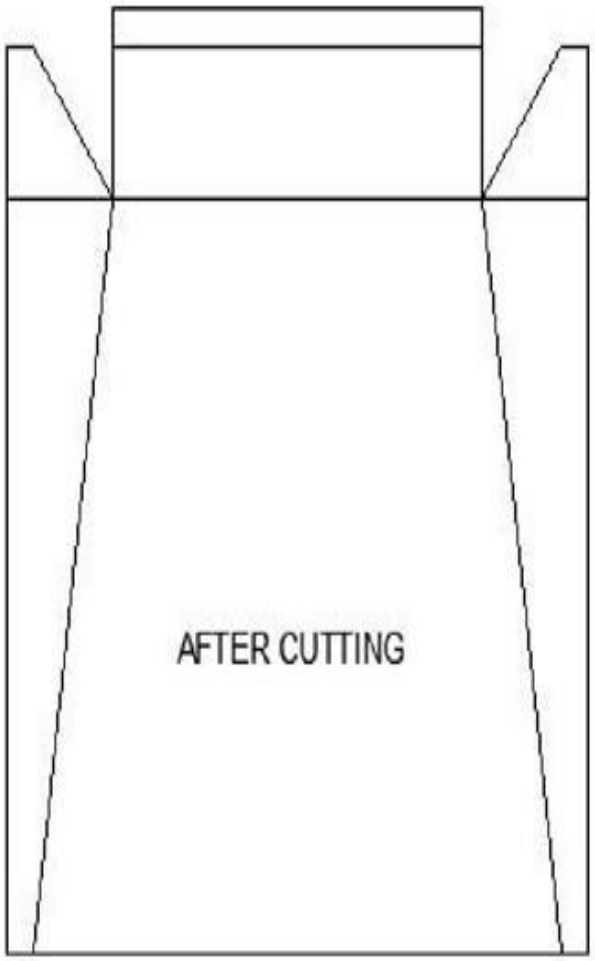

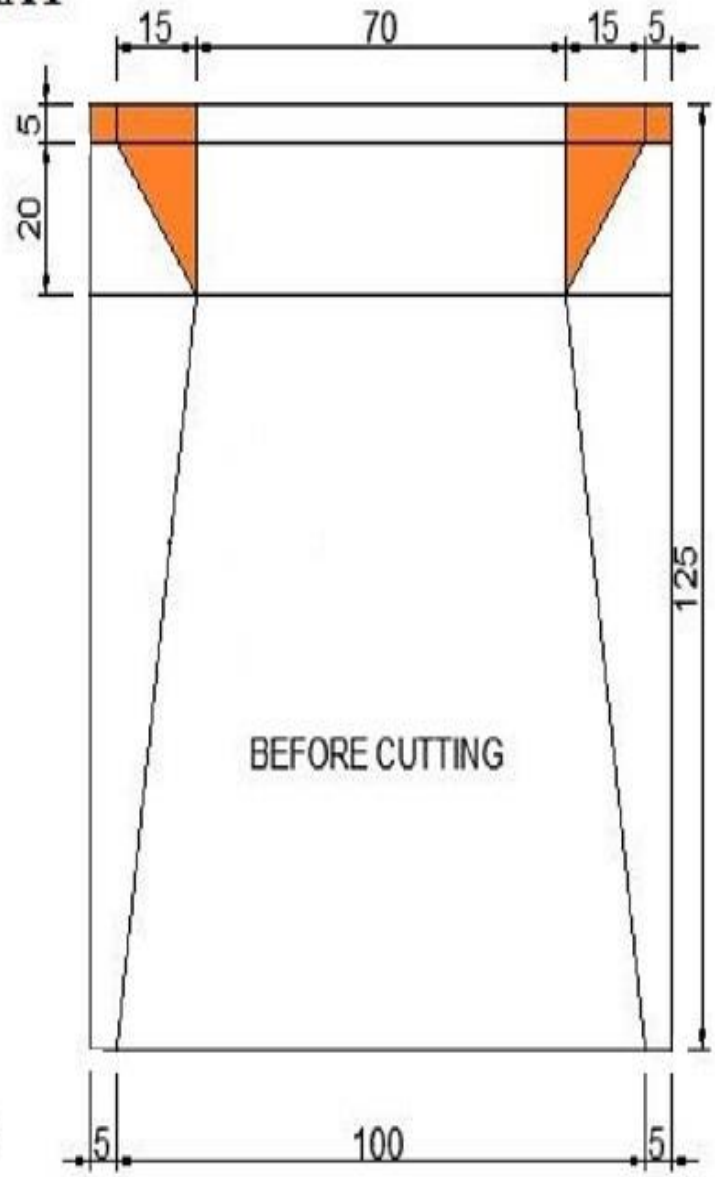

ALL DIMENTIONS ARE IN MM

PROCEDURE: -

1. Clean the given sheet with cotton waste.
2. The size of the given sheet is checked with the steel rule.
3. Flatten the surface of the given sheet with wooden mallet.
4. Check the G.I. Sheet for dimensions and remove extra material, if any.
5. Mark all the measuring lines on the given sheet with scriber.
6. Cut the given sheet with straight snips as required.
7. Fold the given sheet by using stakes and ball peen hammer to the required shape.

SAFETY PRECAUTIONS: -

1. For marking purpose use scriber only. Do not use pencil or pen.
2. Sufficient care is to be taken while cutting and folding of G.I. sheet.
3. Remove the waste pieces immediately from the work place.

RESULT: Tapered tray is made as per the required dimensions.

CONICAL FUNNEL

EXPERIMENT NO: **DATE:**

AIM: - To make Conical funnel using the given G.I. Sheet.

TOOLS REQUIRED: -

1. Steel rule
2. Scriber
3. Straight snip
4. Bench vice
5. Stake
6. Cross peen hammer
7. Wooden mallet
8. Cutting pier

MATERIAL REQUIRED: - Galvanized Iron (G.I) sheet 160 x 80mm size.

SEQUECE OF OPERATIONS:-

1. Cleaning
2. Surface leveling
3. Marking
4. Cutting
5. Folding

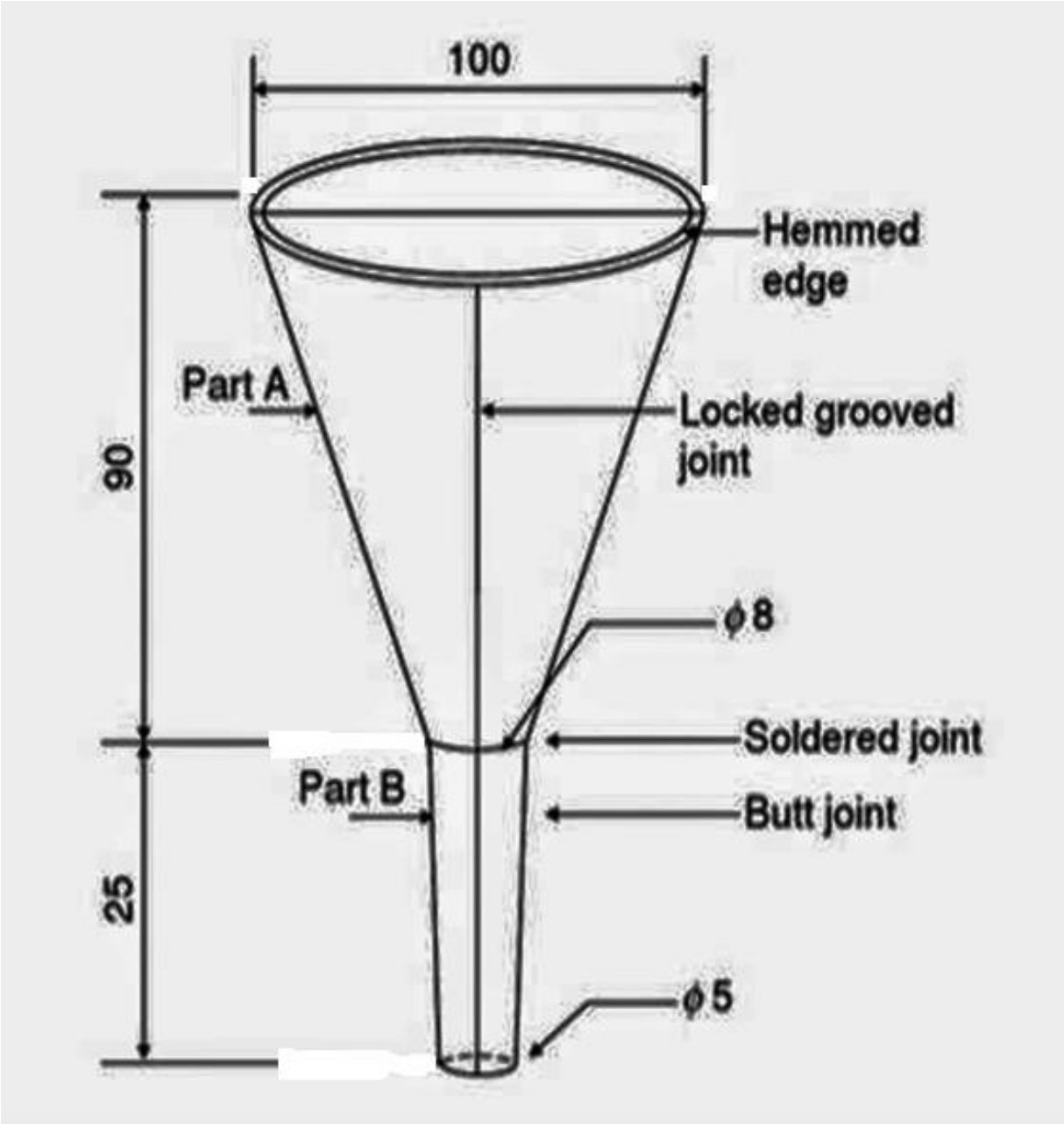

FUNNEL

ALL DIMENSIONS ARE IN MM

PROCEDURE: -

1. Clean the given sheet with cotton waste.
2. The size of the given sheet is checked with the steel rule.
3. Flatten the surface of the given sheet with wooden mallet.
4. Check the G.I. Sheet for dimensions and remove extra material, if any.
5. Mark all the measuring lines on the given sheet with scriber.
6. Cut the given sheet with straight snips as required.
7. Fold the given sheet by using stakes and ball peen hammer to the required shape.

SAFETY PRECAUTIONS: -

1. For marking purpose use scriber only. Do not use pencil or pen.
2. Sufficient care is to be taken while cutting and folding of G.I. sheet.
3. Remove the waste pieces immediately from the work place.

RESULT: Conical funnel is made as per the required dimensions.

ELBOW PIPE

EXPERIMENT NO: **DATE:**

AIM: - To make Elbow pipe using the given G.I. Sheet.

TOOLS REQUIRED: -

1. Steel rule
2. Scriber
3. Straight snip
4. Bench vice
5. Stake
6. Cross peen hammer
7. Wooden mallet
8. Cutting pier

MATERIAL REQUIRED: - Galvanized Iron (G.I) sheet 160 x 80mm size.

SEQUECE OF OPERATIONS:-

1. Cleaning
2. Surface leveling
3. Marking
4. Cutting
5. Folding

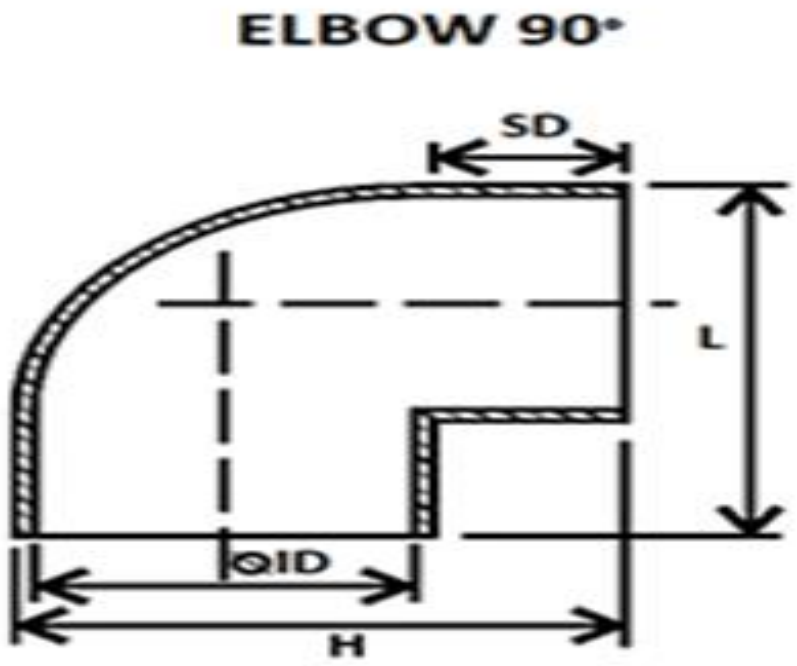

PROCEDURE: -

1. Clean the given sheet with cotton waste.
2. The size of the given sheet is checked with the steel rule.
3. Flatten the surface of the given sheet with wooden mallet.
4. Check the G.I. Sheet for dimensions and remove extra material, if any.
5. Mark all the measuring lines on the given sheet with scriber.
6. Cut the given sheet with straight snips as required.
7. Fold the given sheet by using stakes and ball peen hammer to the required shape.

SAFETY PRECAUTIONS: -

1. For marking purpose use scriber only. Do not use pencil or pen.
2. Sufficient care is to be taken while cutting and folding of G.I. sheet.
3. Remove the waste pieces immediately from the work place.

RESULT: Elbow pipe is made as per the required dimensions.

SHEET METAL VIVA QUESTIONS

1. What is the raw material used in Tin smithy for doing experiments
2. Classify the tools used in Tin smithy
3. Name some measuring tools
4. Name some marking tools
5. Name some cutting tools
6. Name some finishing tools
7. What is the use of Nylon mallet
8. What is the purpose of given tool
9. Differentiate between mallet and Hammer
10. Differentiate between straight snip and curved snip
11. What is the purpose of snip
12. What is the use of anvil
13. What is the purpose of Stake
14. What is the use of scriber
15. What is use of cutting plier
16. What is the supporting tool used to obtain the final shape of the model
17. What type of development is applied for Plain Pipe
18. What type of development is applied for Rectangular tray
19. What type of development is applied for Funnel
20. What is the full form of SWG

BRAZING

EXPERIMENT NO: **DATE:**

Brazing: Brazing is defined as the technique of joining two similar or dis-similar materials, by addition of special filler metal. Brazing is also called as hard soldering and it results in a stronger joint than soldering. It can withstand temperatures up to 800°C and higher pressures. The filler metal, i.e. solder used in brazing is known as spelter, a non-ferrous metal or alloy. The following are the stages involved in brazing:

1) Make a tight fitting joint. Where necessary, file a groove along the joint for the solder to run into.
2) Clean the surface of the joint, free from oil, dirt, grease, rust, etc.
3) Apply flux with a brush
4) Preheat the area until the flux dries out. Then, heat the joint until it is bright red.
5) Apply the solder when it begins to melt; move the torch along the joint for the solder to flow evenly.
6) Clean, file and smoothen the joint

Advantages:

1. Produce leak-proof joints, which are superior to soldered joints.
2. Produce corrosion resistant joints.
3. Brazing can be performed on similar or dis-similar metals.

Disadvantages:

1. Large areas cannot be brazed easily due to the possibility of lack of uniform heating of internal surfaces.
2. Joints have poor strength compared to welded joints.
3. Require tightly mating parts.
4. Brazing fluxes may produce toxic fumes.
5. It cannot be performed on hardened steel.

Precautions: Avoid the inhalation of fumes produced because of fluorides and fluorine compounds that are present in brazing fuses, particularly those used with silver, magnesium and aluminum silicon brazing filler metals.

4. FITTING

INTRODUCTION:

Machine tools are capable of producing work at a faster rate, but there are occasions when components are processed at a bench. Sometimes it becomes necessary to replace or repair a component that must fit accurately with one another or reassemble. This involves a certain amount of hand fitting. The assembly machine tools, jigs, gauges etc., involves certain amount of bench work.

FITTING TOOLS:

Holding tools:-

Bench vice
V-block with clamp
C-clamp

Bench vice:-

It is a work holding device, when vice handle is turned in a clockwise direction the sliding jaw forces the work against the fixed jaw, the greater the force applied to the handle, the tighter is the work held.

V-block with clamp:-

It is a rectangular (or) square block with v-groove on one or both sides, opposite to each other. It holds cylindrical work pieces.

C-clamp:-

This is used to hold work against an angle plate or v-block.

MARKING AND MEASURING TOOLS:

1. Surface plate
2. Try square
3. Angle plate
4. Scriber
5. Universal scribing block
6. Odd leg caliper
7. Divider
8. Calipers
9. Dot punch
10. Vernier caliper

Surface plate:-

It is used for testing flatness of work piece, for marking out small works.

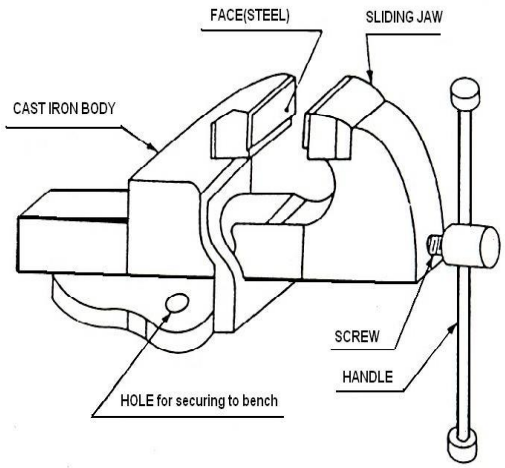

Fig: 1 Bench wise

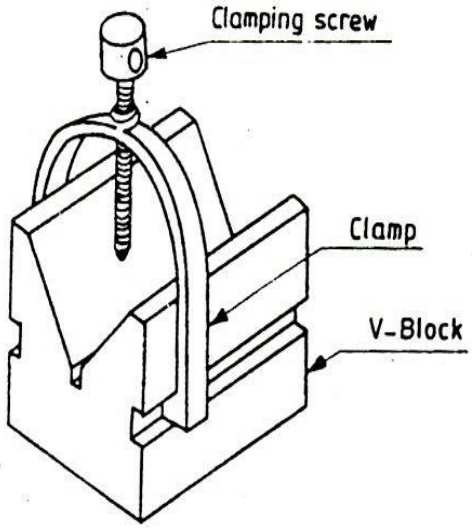

Fig: 2 V- Block

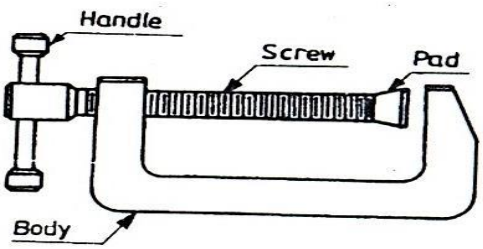

Fig: 3 C – Clamp

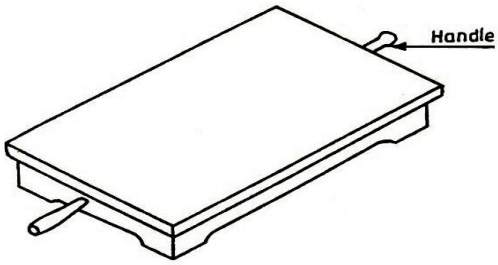

Fig: 4 Surface plate

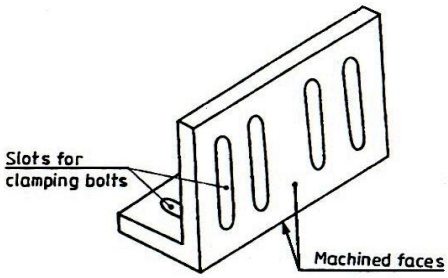

Fig: 5 Angle plate

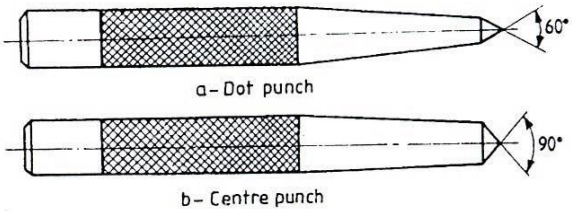

Fig: 6 Dot punch

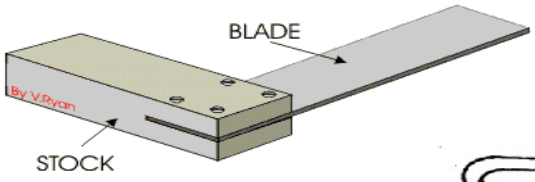

Fig: 6 try square

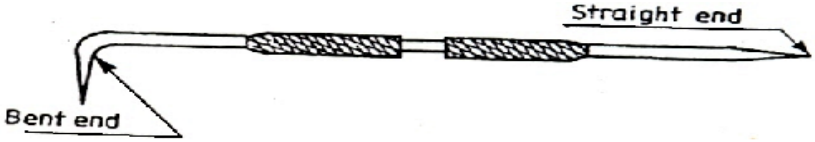

Fig: 7 scriber

Combination cutting pliers: -
This is made of tool steel and is used for cutting as well as for ripping work.
Taps and die holders: -
Tap and wrenches are used for cutting internal threads in a drilled hole.
Dies and die holders:-
They are used for making external threads. Dies are made either solid (or) split type.

TYPES OF FILES:
Hand file:-
It is a rectangular in section tapered in thickness but parallel in width.
Flat file:-
Rectangular in section and tapered for 1/3rd length in width and thickness.
Square file:-
Square in section and tapered for 1/3rd length on all sides.
Half round file:-
It has one flat face, connecting by a curved (surface) face & tapered for 1/3rd length.
Round file:-
Circular in cross section and tapered for 1/3rd length, it has double cut teeth.

MISCELLANEOUS TOOLS:
Ball peen hammer:-
It has a flat face, which is used for general work and a ball end is used for riveting.
Screw driver:-
It is designed to turn the screws. The blade is made of steel and is available in different lengths and diameters.
Spanners:-
It is a tool for turning nuts and bolts. It is usually made of forged steel.

FITTING OPERATIONS:
Chipping:-
Removing metal with a chisel is called chipping and is normally used where machining is not possible.
Fitting:-
1. Pinning of files:-
   Soft metals cause this; the pins are removed with a file card.
2. Checking flatness and square ness:-
   To check flatness across thickness of plate.

MARKING AND MEASURING:
Measurements are taken either from a center line, for visibility of the non-ferrous metals and oxide coated steels are used.

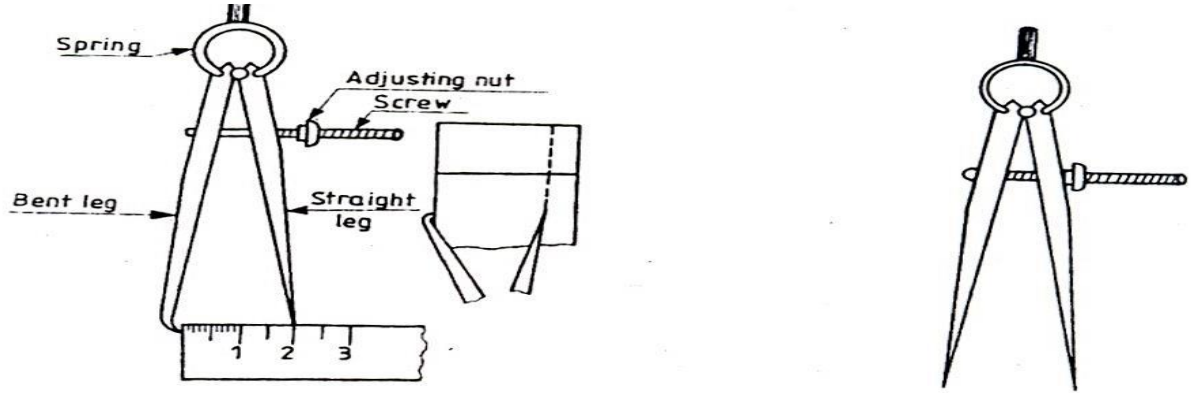

Fig: 8 odd leg clamp and divider

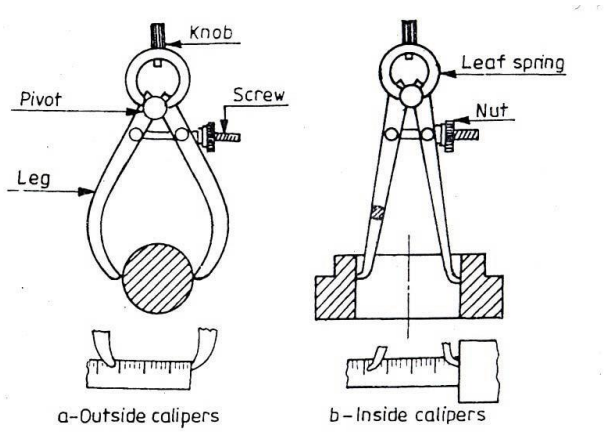

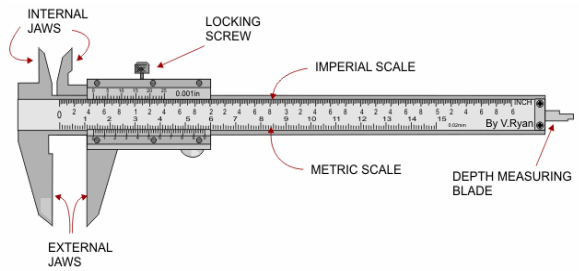

Fig: 9 calipers

Fig: 10 Vernier caliper

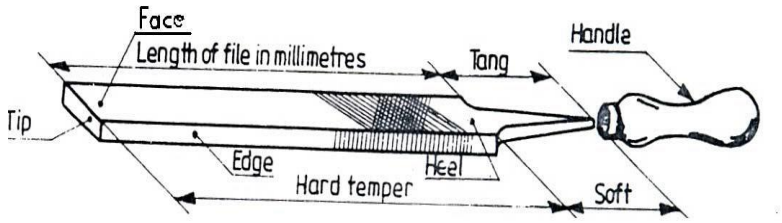

Fig: 11 Parts of hand file

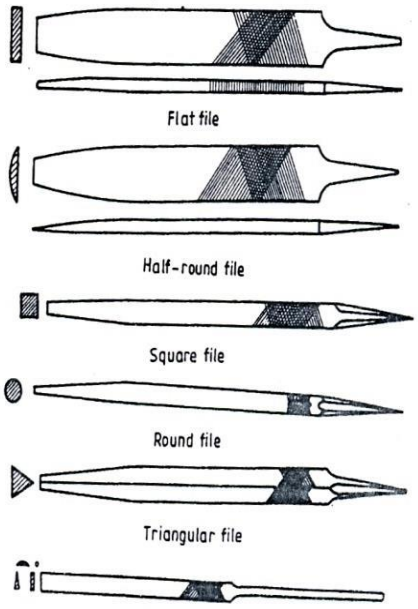

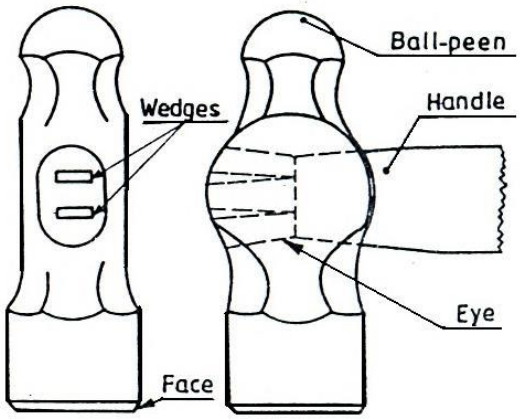

Fig: 12 Types of files

Fig: 13 ball peen hammer

V-FIT

EXPERIMENT NO: **DATE:**

AIM: - To make a V-fit from the given two M.S pieces.

TOOLS REQUIRED: -

1. Bench vice
2. Steel rule
3. Try square
4. Ball peen hammer
5. Scriber
6. Hack saw with blade
7. Dot punch and Centre punch
8. Surface plate
9. Rough and smooth flat files
10. Flat chisel and triangular file

MATERIAL REQUIRED: - Mild steel (M.S) plate of size 50 x 50 x 5mm –2 Nos.

SEQUECE OF OPERATIONS:-

1. Filing
2. Checking flatness and squareness
3. Marking and measuring
4. Punching
5. Sawing
6. Chipping
7. Finishing

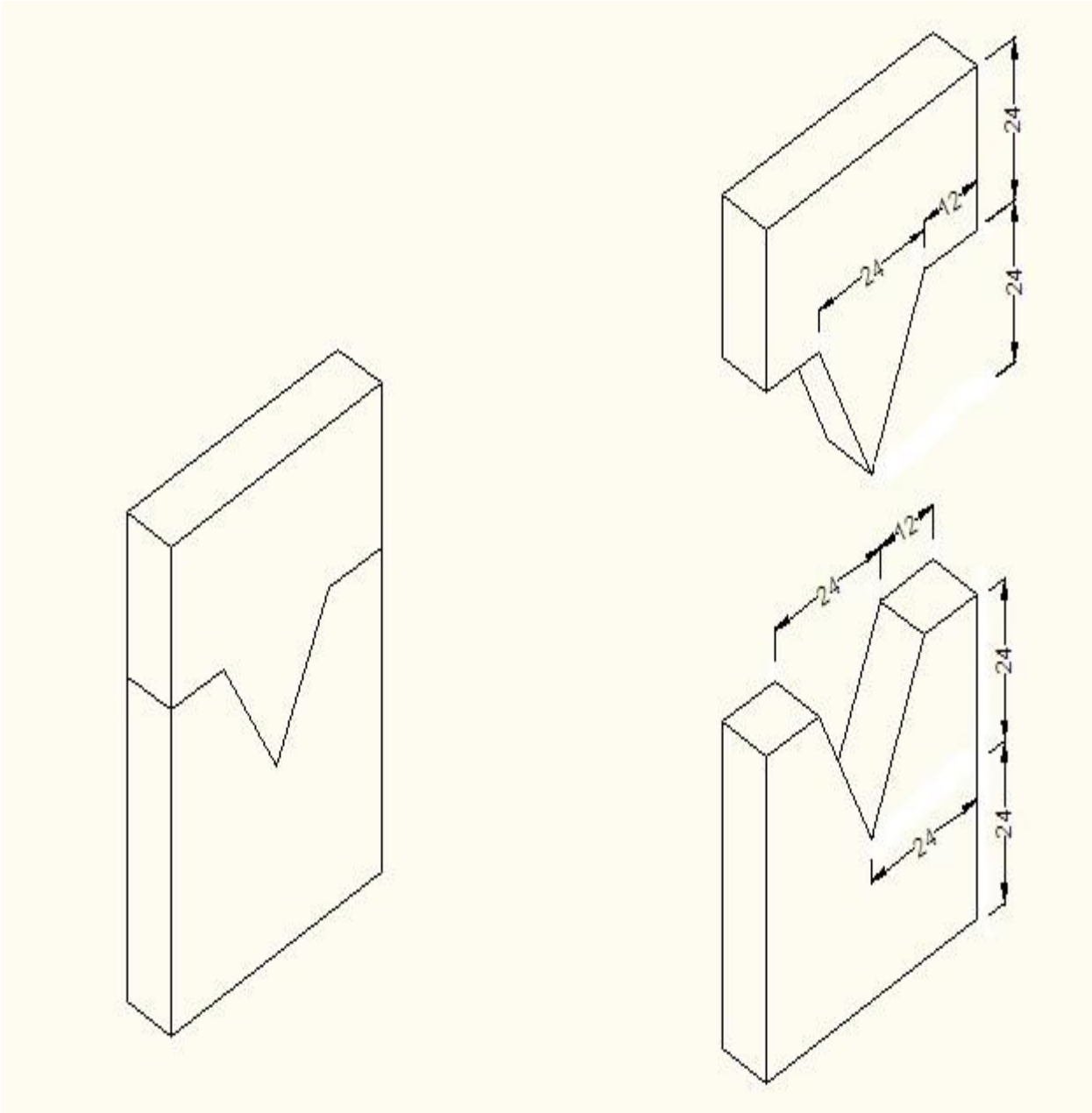

ALL DIMENSIONS ARE IN MM

PROCEDURE: -

1. The burrs in the pieces are removed and the dimensions are checked with the steel rule.
2. The pieces are clamped one after the other and the outer mating edges are filed by using rough and smooth files.
3. The flatness, straightness and squareness i.e. right angle between adjacent sides are checked with help of Try-square.
4. Chalk is then applied on the surfaces of the two pieces.
5. The given dimensions of the V-fitting are marked carefully.
6. Using the dot punch, dots are punched along the above scribed lines.
7. Using the hack saw, the unwanted portions are removed.
8. Using the flat chisel, the unwanted material in the piece Y is removed.
9. The cut edges are filed by the half round file.
10. The corners of the stepped surfaces are filed by using a square or triangular file to get the sharp corners.
11. The pieces (X and Y) are fitted together and the mating is checked for the correctness of the fit.

SAFETY PRECAUTIONS: -

1. Care is taken to see that the marking dots are not crossed, which is indicated by the half of the punch dots left on the pieces.
2. Apply pressure in forward direction during hack sawing.
3. Don’t rub steel rule on the job.
4. Fix blade in hack saw frame with correct tension.
5. During hack sawing the coolant like water or lubricating oil is to be used.
7. Files are to be cleaned properly after using.

RESULT: - The required V-fit is thus obtained as per given dimensions.

DOVETAIL FIT

EXPERIMENT NO: **DATE:**

AIM: - To make a Dovetail fit from the given two M.S pieces.

TOOLS REQUIRED: -

1. Bench vice
2. Steel rule
3. Try square
4. Ball peen hammer
5. Scriber
6. Hack saw with blade
7. Dot punch and Centre punch
8. Surface plate
9. Rough and smooth flat files
10. Flat chisel and triangular file

MATERIAL REQUIRED: - Mild steel (M.S) plate of size 50 x 50 x 5mm –2 Nos.

SEQUECE OF OPERATIONS:-

1. Filing
2. Checking flatness and squareness
3. Marking and measuring
4. Punching
5. Sawing
6. Chipping
7. Finishing

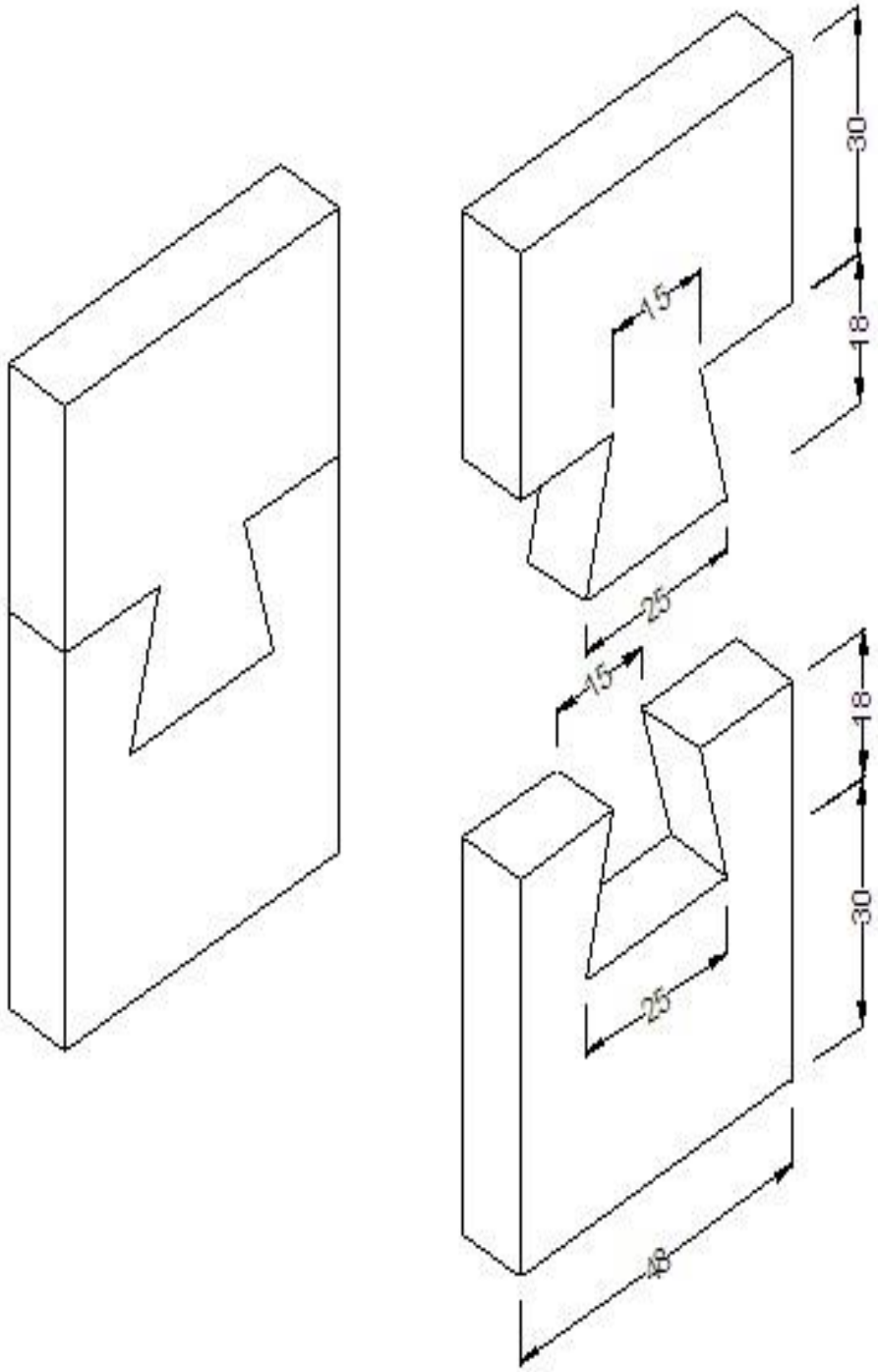

ALL DIMENSIONS ARE IN MM

PROCEDURE: -

1. The burrs in the pieces are removed and the dimensions are checked with the steel rule.
2. The pieces are clamped one after the other and the outer mating edges are filed by using rough and smooth files.
3. The flatness, straightness and squareness i.e. right angle between adjacent sides are checked with help of Try-square.
4. Chalk is then applied on the surfaces of the two pieces.
5. The given dimensions of the V-fitting are marked carefully.
6. Using the dot punch, dots are punched along the above scribed lines.
7. Using the hack saw, the unwanted portions are removed.
8. Using the flat chisel, the unwanted material in the piece Y is removed.
9. The cut edges are filed by the half round file.
10. The corners of the stepped surfaces are filed by using a square or triangular file to get the sharp corners.
11. The pieces (X and Y) are fitted together and the mating is checked for the correctness of the fit.

SAFETY PRECAUTIONS: -

1. Care is taken to see that the marking dots are not crossed, which is indicated by the half of the punch dots left on the pieces.
2. Apply pressure in forward direction during hack sawing.
3. Don’t rub steel rule on the job.
4. Fix blade in hack saw frame with correct tension.
5. During hack sawing the coolant like water or lubricating oil is to be used.
7. Files are to be cleaned properly after using.

RESULT: - The required Dovetail fit is thus obtained as per given dimensions.

SEMI-CIRCULAR FIT

EXPERIMENT NO: **DATE:**

AIM: - To make a Semi-Circular fit from the given two M.S pieces.

TOOLS REQUIRED: -

1. Bench vice
2. Steel rule
3. Try square
4. Ball peen hammer
5. Scriber
6. Hack saw with blade
7. Dot punch and Centre punch
8. Surface plate
9. Rough and smooth flat files
10. Flat chisel and triangular file

MATERIAL REQUIRED: - Mild steel (M.S) plate of size 50 x 50 x 5mm –2 Nos

SEQUECE OF OPERATIONS:-

1. Filing
2. Checking flatness and squareness
3. Marking and measuring
4. Punching
5. Sawing
6. Chipping
7. Finishing

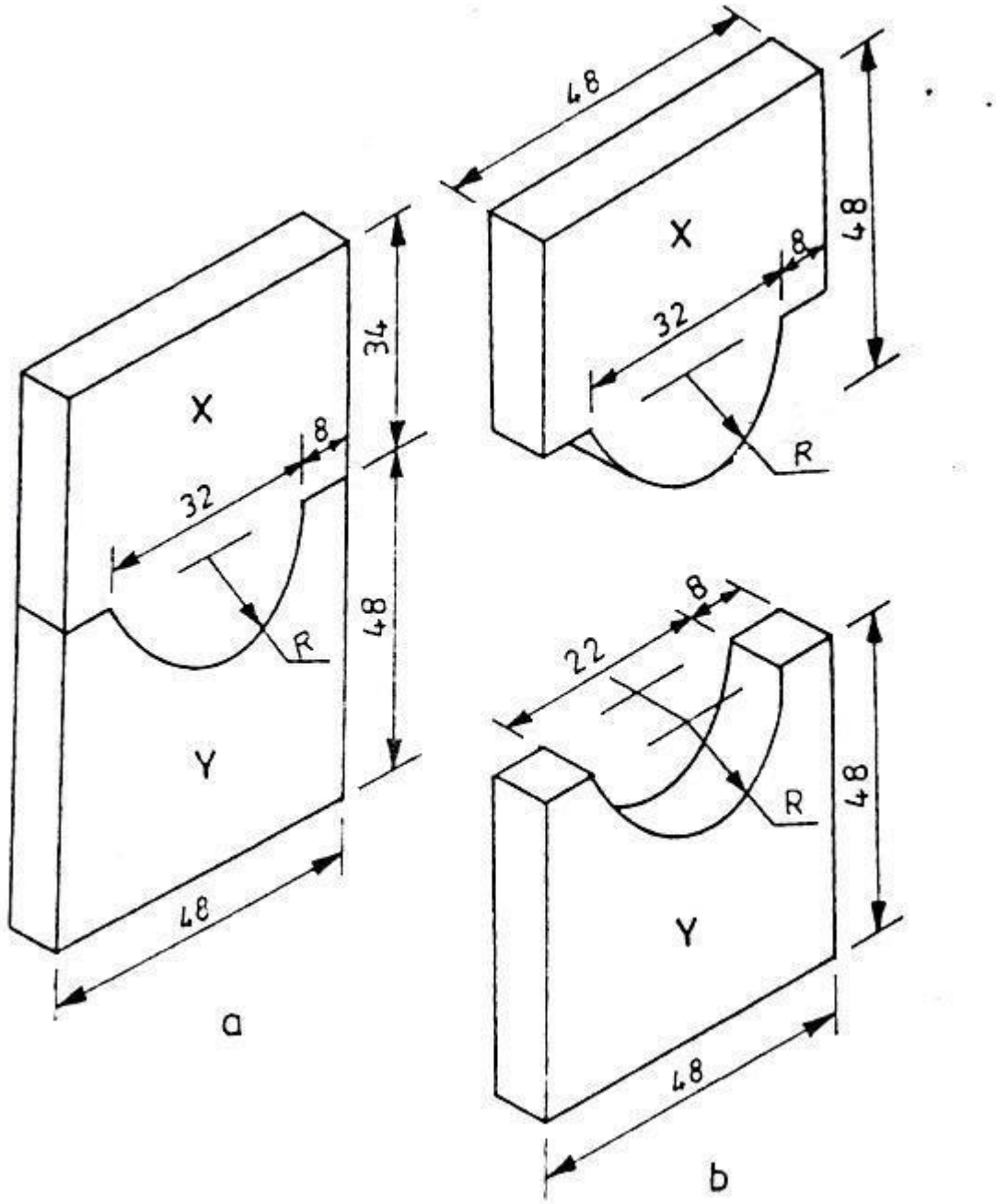

ALL DIMENSIONS ARE IN MM

PROCEDURE: -

1. The burrs in the pieces are removed and the dimensions are checked with the steel rule.
2. The pieces are clamped one after the other and the outer mating edges are filed by using rough and smooth files.
3. The flatness, straightness and squareness i.e. right angle between adjacent sides are checked with help of Try-square.
4. Chalk is then applied on the surfaces of the two pieces.
5. The given dimensions of the V-fitting are marked carefully.
6. Using the dot punch, dots are punched along the above scribed lines.
7. Using the hack saw, the unwanted portions are removed.
8. Using the flat chisel, the unwanted material in the piece Y is removed.
9. The cut edges are filed by the half round file.
10. The corners of the stepped surfaces are filed by using a square or triangular file to get the sharp corners.
11. The pieces (X and Y) are fitted together and the mating is checked for the correctness of the fit.

SAFETY PRECAUTIONS: -

1. Care is taken to see that the marking dots are not crossed, which is indicated by the half of the punch dots left on the pieces.
2. Apply pressure in forward direction during hack sawing.
3. Don’t rub steel rule on the job.
4. Fix blade in hack saw frame with correct tension.
5. During hack sawing the coolant like water or lubricating oil is to be used.
7. Files are to be cleaned properly after using.

RESULT: - The required Semi-Circular fit is thus obtained as per given dimensions.

FITTING VIVA QUESTIONS

1. Define the terms: Fitting and Bench work.
2. Name the material with which a vice body is normally made of. What is the characteristic of this material?
3. What for a C-clamp is used? Question: Classify hacksaw blades.
4. Differentiate between ‘Single cut’ and ‘Double cut’ files.
5. Differentiate between ‘Cross filing’ and ‘Draw filing’.
6. Name the different types of hammers used in fitting work.
7. Differentiate between cross-peen hammer and straight-peen hammer.
8. What is meant by pinning of files?
9. With what the size of a spanner is denoted?

BICYCLE TIRE PUNCTURE AND CHANGE OF TWO WHEELER TYRE

EXPERIMENT NO: **DATE:**

AIM: - To repair bicycle tire puncture and change of two wheeler tyre.

TOOLS REQUIRED: -

1. Rim protector
2. Tire Irons
3. Valve core tool
4. Air compressor
5. Bead breaker
6. Silicone lubricant
7. Tire pressure gauge
8. Hand gloves

MATERIALS REQUIRED: -

1. Bicycle tire puncture kit

BICYCLE TIRE PUNTCURE:

Procedure:

Finding the puncture:

1. Remove the wheel from the bike.
2. Use tire levers to remove the tire.
3. Locate the hole that's causing the leak.
4. Mark the hole in the tube.

Patching the hole:

1. Remove any foreign objects from the hole.
2. Sand around the hole if necessary.
3. Apply the patch.
4. Know when replacing the tube is a smarter choice.

Putting the wheel back together:

1. Replace the tube in the tire.
2. Work the tire and tube back onto the wheel.

3. Inspect the bead and pump up the tube gradually to let the tube and tire settle.
4. Replace the wheel on the bike.
5. Consider buying a new tube when you can

CHANGE OF TWO WHEELER TYRE:

Procedure:

Taking off the wheel:

1. Put your bicycle on its side with the chain facing up.
2. Adjust your gears to the smallest ring if you are removing the back tire.
3. Open and remove the quick release lever, if your bike has one.
4. Use a wrench to loosen the nuts if you don't have a quick release lever.
5. Detach the brake cables if necessary.
6. Lift the wheel off the frame.

Removing the tire and tube:

1. Shift down and hang the bike from a tree or workstand to work on it.
2. Disengage the brakes if they get in the way of removing the wheel.
3. Loosen the nuts that attach the wheel axle to the bike.
4. Pull the chain clear of the gear discs if you are removing the rear wheel.
5. Pull the wheel clear of the bike frame.

Pulling out the old tube:

1. Deflate the tire fully while it's still on the removed wheel.
2. Pry out a section of the outer tire with two simple levers.
3. Pop out the rest of the tire from the wheel rim.
4. Pull the tube out from between the outer tire and wheel rim.

Installing the new tube:

1. Pump up the replacement tube just until it has a basic circular shape.
2. Feed the new tube between the outer tire and wheel rim.
3. Work the tire back onto the inner rim of the wheel frame.
4. Fill the new tube with air to the recommended tire pressure.

Reattaching the wheel:

1. Follow the same procedure you used to remove the wheel, only in reverse.
2. Guide the wheel onto the fork on the bike frame.
3. RE-engage the brakes.
4. Tighten the nuts to secure the wheel in place.

RESULT:

5. ELECTRICAL WIRING

INTRODUCTION:-

Power is supplied to domestic installations through a phase and a neutral, forming a single phase. A.C 230V, 2- wire system for industrial establishments. Power is supplied through three phase four wire system to give 440V. Fig.Shows the power tapping for domestic and industrial purposes. The neutral is earthed at the distribution sub-station of the supply.

When supplied to domestic utilizes power is fed to a kilowatt meter and then to a distribution panel. The panel distributes power along several circuits' breakers. The panel also serves as a main switch.

Electrical wiring is defined as a system of electrical conductors, components and apparatus for conveying electrical power from the source to the point of use. The wiring system must be designed to provide a constant voltage to the load.

ELEMENTS OF HOUSE WIRING:-

Fuses & circuit_Breakers:

These are the devices to provide protection to a circuit against excess current. Open link fuses are not in safe in operations, even though they are cheaper and reliable. It consists of a thin strip of metal (or) wire.

Electric switch:

This is a device that makes and breaks or changes the course of electric circuit. It consists of 2 or more contacts mounted on an insulating structure and arranged such that they may be moved in to and out of contact with each other by a suitable operating mechanism.

Plug:

It is a device carrying 2 or 3 contact, designed for engagement with corresponding plugs pins and arranged for connection to fixed wiring and arranged for attachment to appliances such as radio, T.V, table, fan etc.,

Socket outlet:-

It is a device carrying 2 or 3 contacts, designed for engagement with corresponding plug pins and arranged for connection to fixing wiring.

Lamp holder:-

These are designed to hold lamps & connect them in the circuit. Both bay one cap and screw lamp holders are available up to 200 watts lamps.

Ceiling rose:-

A ceiling rose consists of a circular base & cover made of Bakelite. The base has 2 or 3 terminal plates. One end of the plate is connected to supply wire connected to pendent lamp, ceiling fan, exhaust fan, etc.

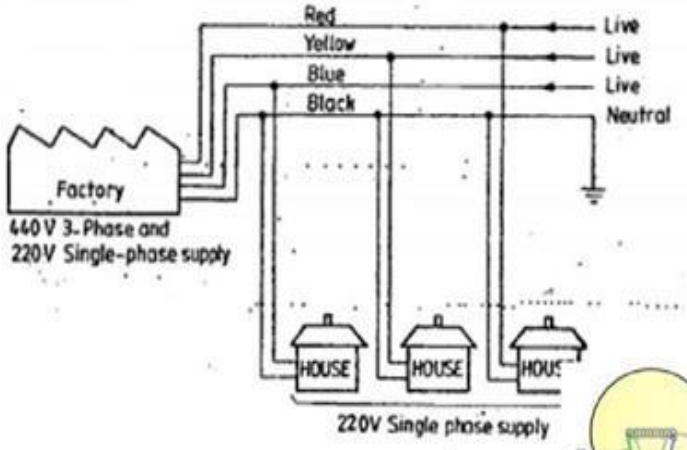

Fig. 3.1 3 phase-4 wire supply

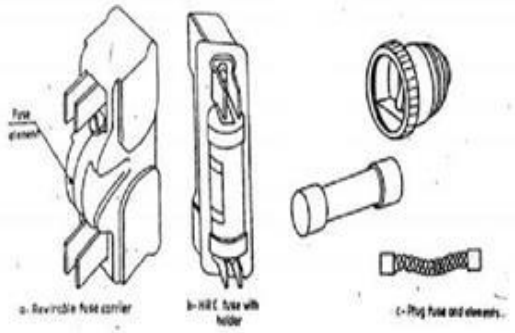

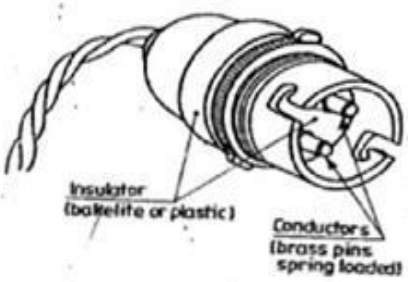

Fig. 3.6 Pendant lamp holder

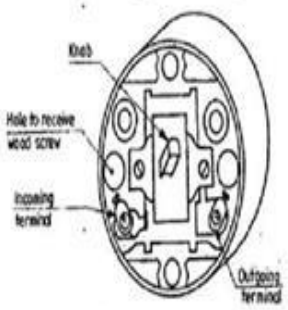

One-way switch

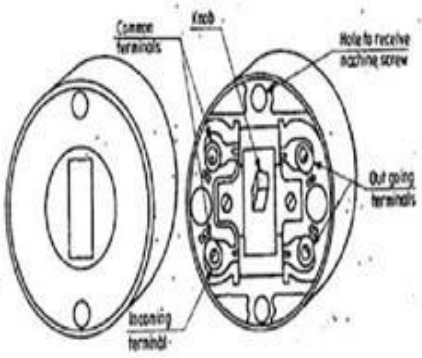

Cap ..... Two-way switch

Fig. 3.4 Electric switches

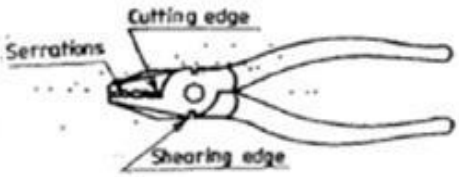

Fig. 8.22 Combination plier

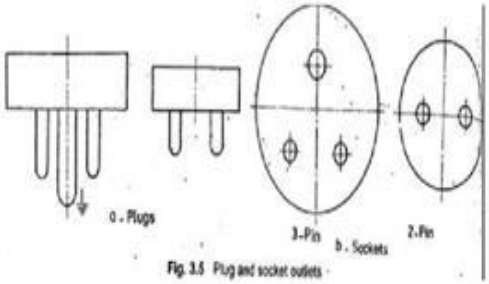

Fig. 3.5 Plug and socket outlets

NOTE: Parts of bulb
1) Glass bulb 2) Low-pressure inert gas 3) Tungsten-filament 4) Contact wire (out of stem) 5) Contact wire (into stem) 6) Support wires7) Stem Glass mount 8) Contact wire (out of stem) 9) Cap (Steeve) 10) Insulation 11) Electrical contact.

Fig. 8.23 Nose plier

Main switch:-

This is a switch intended to connect or cut-off the supply of electrical to the whole of an installation. It is generally of metal clad type. The metal clad gives greater strength and safety. The main switch contains one or more fuses, single phase, and A.C. circuits.

Incandescent light:-

Incandescent means 'glowing at white heat'. A lamp actually works like heating elements that it

gives off light by becoming white hot, the amount of power it consume is stamped on the bulb. Higher the wattage, brighter the light. The bulbs have filaments made of tungsten.

Interior wiring:-

Wires & wire sizes:- A wire is defined as a bare or insulated conductor consisting of one (or) several strands. An insulating wire consists of a conductor with insulating material made of Vulcanized Indian Rubber (VIR) (or) Poly Vinyl Chloride (PVC). The wire may consist of 1 or several twisted strands. A multi sore conductor consists of several cores insulated from one another and enclosed in a common seating. Wire sizes are specified by the diameter of the wire, using a standard wire gauge (SWG), which also gives an idea of the current carrying capacity. The specification consists of the both the number of strands and the diameter of the each wire in it

PARALLEL AND SERIES
(WIRING FOR TWO LAMPS CONTROL BY ONE SWITCH)

EXPERIMENT NO: **DATE:**

AIM: - To give connection to two lamps, controlled With Independent Switch Controls with or Without Looping.

TOOLS REQUIRED: -

1. Screw driver
2. Cutting pliers
3. Ball peen hammer
4. Insulation remover
5. Tester

MATERIAL REQUIRED: -

1. Wooden wiring board
2. Silk wire
3. Electrical bulbs - 2 No
4. One-way switch - 1No
5. Wooden round blocks - 1 No
6. Batten lamp holders - 1 No
7. Wire clips
8. Nails
9. Screws

SERIES

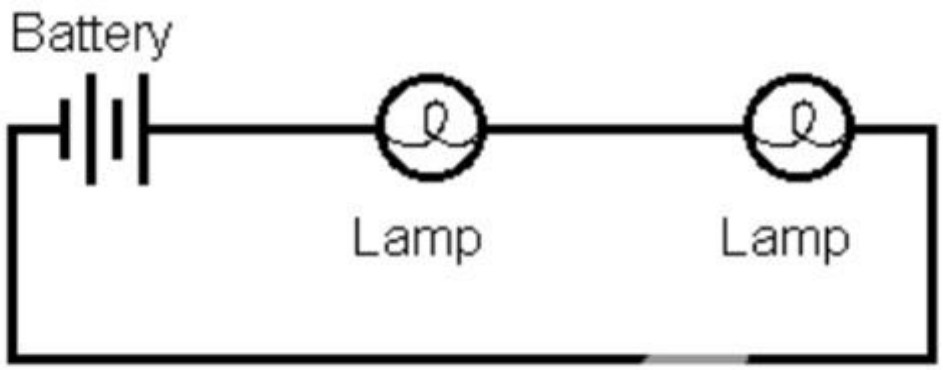

PARALLEL

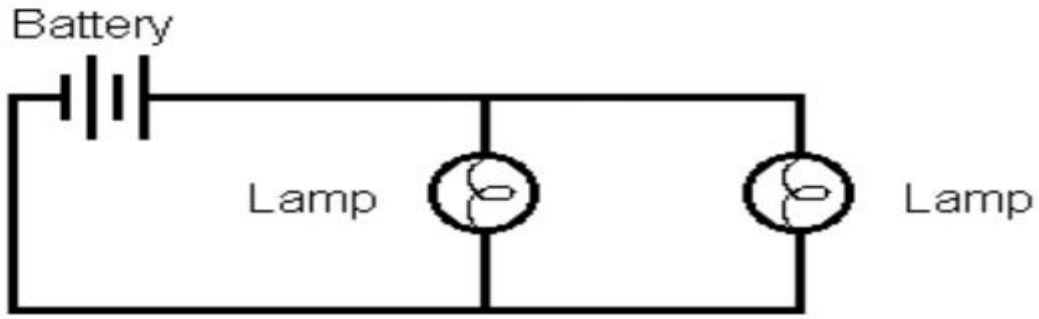

PROCEDURE: -

1. The outline of the wiring diagram is marked on the wooden wiring board.
2. Clips are nailed to the board, following the wiring diagram.
3. Wires are stretched and clamped with the clips.
4. Round blocks are screwed on to the board, as per the diagram.
5. Wires are connected to the holders and the switch, which are then screwed on to the round blocks.
6. Bulb is fitted to the holder.
7. The wiring connections are tested, by giving power supply.

SAFETY PRECAUTIONS: -

1. Electricity has no respect for ignorance. Do not apply voltage or turn-on any device until it has been properly checked.
2. Care should be taken from electrical shocks.
3. Don’t touch the connection points.
4. Avoid loose connection.
5. Don’t work at damped areas and with wet clothing.
6. Handle the lamp carefully.

Result: - The electrical circuit, for two lights controlled by one switch in parallel and series is thus made.

TWO_WAY SWITCH

EXPERIMENT NO: **DATE:**

AIM: - To give connections to one light controlled by 2 two-way switches.

TOOLS REQUIRED: -

1. Screw driver
2. Cutting pliers
3. Ball peen hammer
4. Insulation remover
5. Tester
6. 2 two-way switches

MATERIAL REQUIRED: -

1. Wooden wiring board
2. Silk wire
3. Electrical bulb - 1 No
4. Two -way switches - 2Nos
5. Wooden round block - 3 Nos
6. Batten lamp holder - 1 No
7. Wire clips
8. Nails
9. Screws

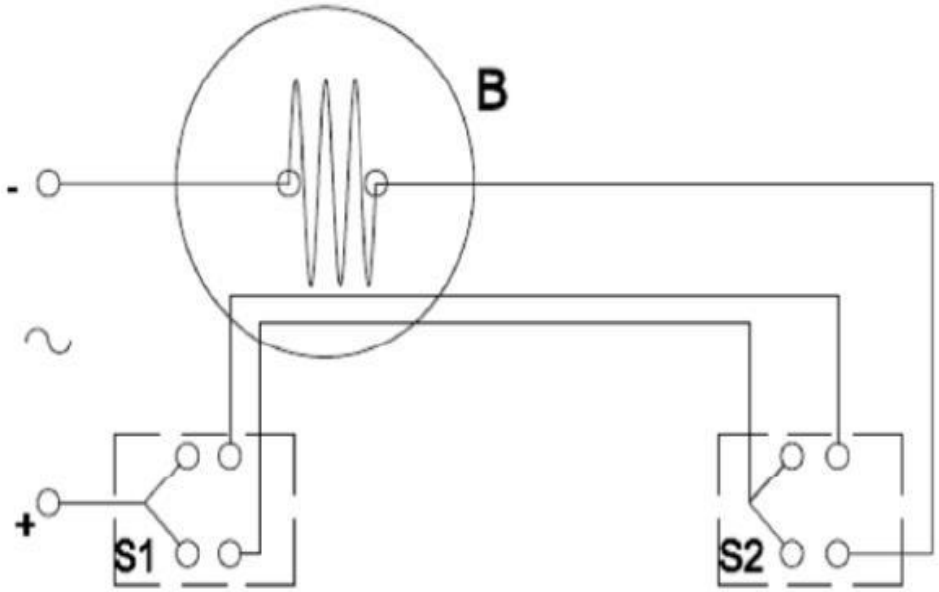

Fig:1 One lamp controlled by 2 two – way switches

PROCEDURE: -

1. The outline of the wiring diagram is marked on the wooden wiring board.
2. Clips are nailed to the board, following the wiring diagram.
3. Wires are stretched and clamped with the clips.
4. Round blocks are screwed on to the board, as per the diagram.
5. Wires are connected to the holders and the switch, which are then screwed on to the round blocks.
6. Bulb is fitted to the holder.
7. The wiring connections are tested, by giving power supply.

SAFETY PRECAUTIONS: -

1. Electricity has no respect for ignorance. Do not apply voltage or turn-on any device until it has been properly checked.
2. Care should be taken from electrical shocks.
3. Don’t touch the connection points.
4. Avoid loose connection.
5. Don’t work at damped areas and with wet clothing.
6. Handle the lamp carefully.

RESULT: -

GODOWN LIGHTING

EXPERIMENT NO: **DATE:**

AIM: - To give connections to godown lighting.

TOOLS REQUIRED: -

1. Screw driver
2. Cutting pliers
3. Ball peen hammer
4. Insulation remover
5. Tester
6. 2 two-way switches

MATERIAL REQUIRED: -

1. Wooden wiring board
2. Silk wire
3. Electrical bulb - 3 Nos
4. One-way switches - 4 Nos
5. Wooden round block - 7 Nos
6. Batten lamp holder - 3 Nos
7. Wire clips
8. Nails
9. Screws

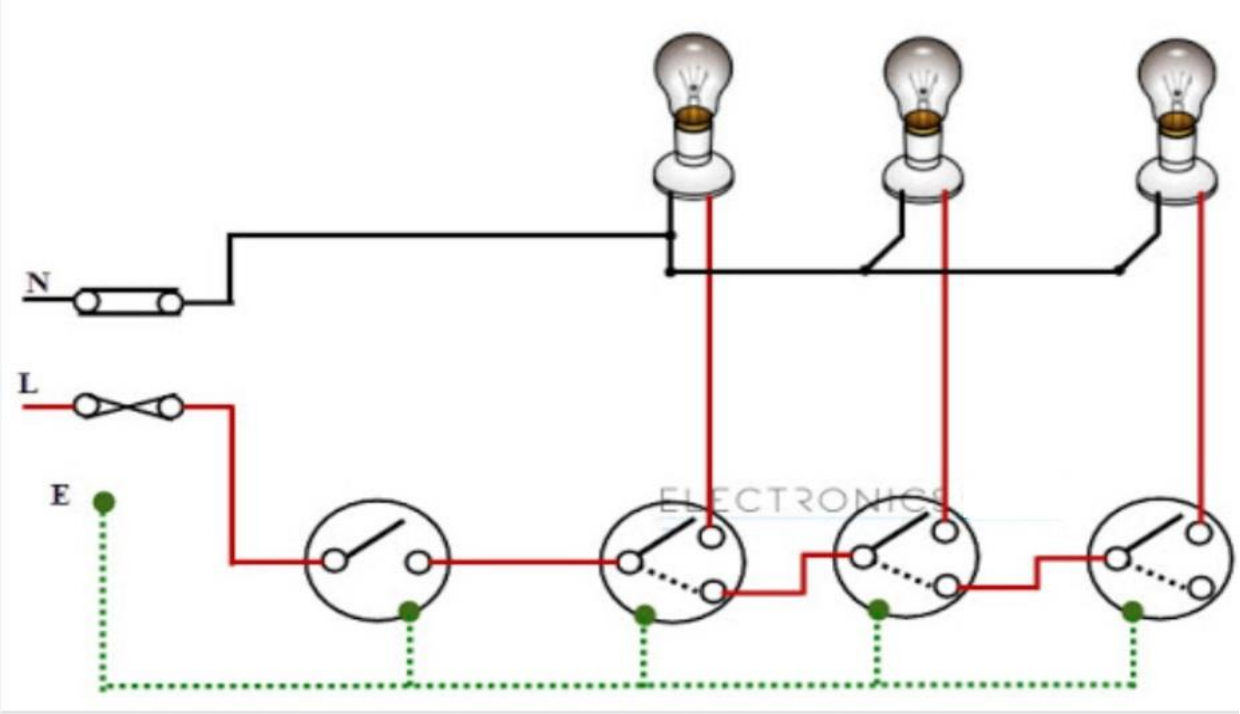

PROCEDURE: -

1. The outline of the wiring diagram is marked on the wooden wiring board.
2. Clips are nailed to the board, following the wiring diagram.
3. Wires are stretched and clamped with the clips.
4. Round blocks are screwed on to the board, as per the diagram.
5. Wires are connected to the holders and the switch, which are then screwed on to the round blocks.
6. Bulb is fitted to the holder.
7. The wiring connections are tested, by giving power supply.

SAFETY PRECAUTIONS: -

1. Electricity has no respect for ignorance. Do not apply voltage or turn-on any device until it has been properly checked.
2. Care should be taken from electrical shocks.
3. Don’t touch the connection points.
4. Avoid loose connection.
5. Don’t work at damped areas and with wet clothing.
6. Handle the lamp carefully.

RESULT: -

TUBE LIGHT

EXPERIMENT NO: **DATE:**

Tube light: Tube lights are the commonly used light sources for illumination in the houses, industries, commercial organizations etc. A tube light is a low pressure mercury discharge lamp with internal surface coated with suitable fluorescent material.

AIM: - To give connections to tube light.

TOOLS REQUIRED: -

1. Screw driver
2. Cutting pliers
3. Ball peen hammer
4. Insulation remover
5. Tester
6. 2 two-way switches

MATERIAL REQUIRED: -

1. Wooden wiring board
2. Silk wire
3. Electrical bulb - 1 No
4. Two -way switches - 2Nos
5. Wooden round block - 3 Nos
6. Batten lamp holder - 1 No
7. Wire clips
8. Nails
9. Screws
10. Starter
11. Ballast

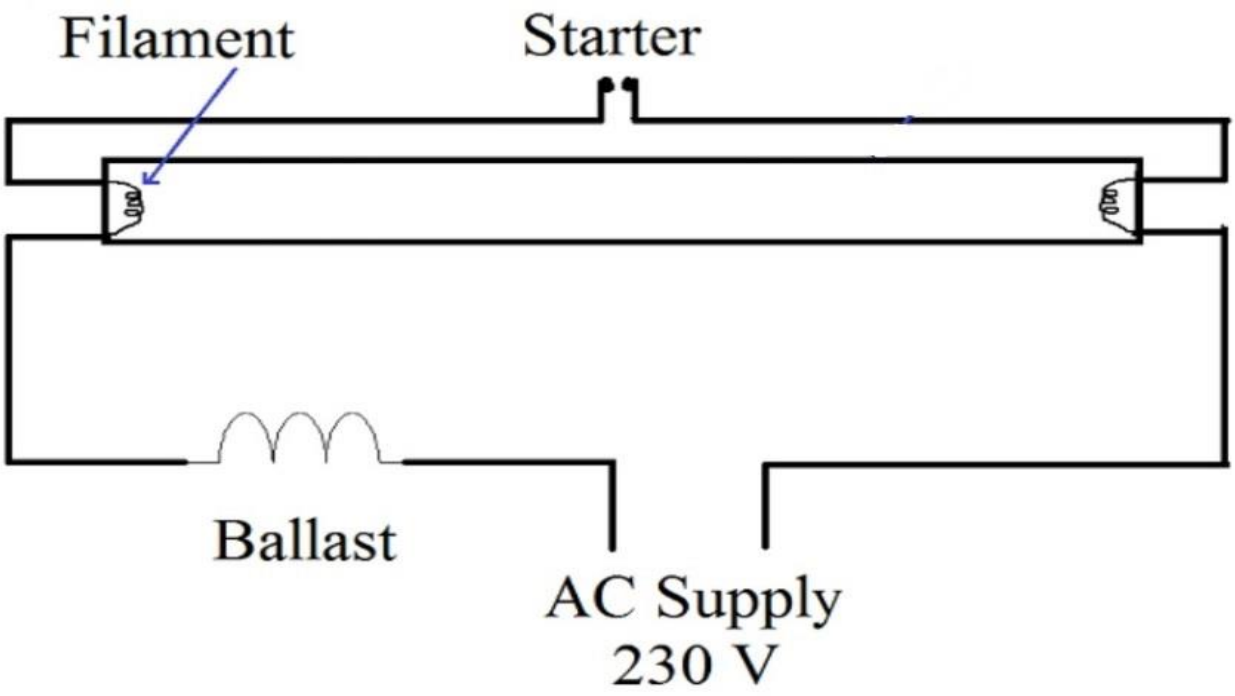

PROCEDURE: -

1. The outline of the wiring diagram is marked on the wooden wiring board.
2. Clips are nailed to the board, following the wiring diagram.
3. Wires are stretched and clamped with the clips.
4. Round blocks are screwed on to the board, as per the diagram.
5. Wires are connected to the holders and the switch, which are then screwed on to the round blocks.
6. Bulb is fitted to the holder.
7. The wiring connections are tested, by giving power supply.

SAFETY PRECAUTIONS: -

1. Electricity has no respect for ignorance. Do not apply voltage or turn-on any device until it has been properly checked.
2. Care should be taken from electrical shocks.
3. Don’t touch the connection points.
4. Avoid loose connection.
5. Don’t work at damped areas and with wet clothing.
6. Handle the lamp carefully.

RESULT: -

3-PHASE MOTOR

EXPERIMENT NO: **DATE:**

AIM: - To give connections to 3-Phase motor.

TOOLS REQUIRED: -

1. Screw driver
2. Cutting pliers
3. Ball peen hammer
4. Insulation remover
5. Tester
6. 2 two-way switches

MATERIAL REQUIRED: -

1. Wooden wiring board
2. Silk wire
3. Electrical bulb - 3 Nos
4. One-way switches - 4 Nos
5. Wooden round block - 7 Nos
6. Batten lamp holder - 3 Nos
7. Wire clips
8. Nails
9. Screws

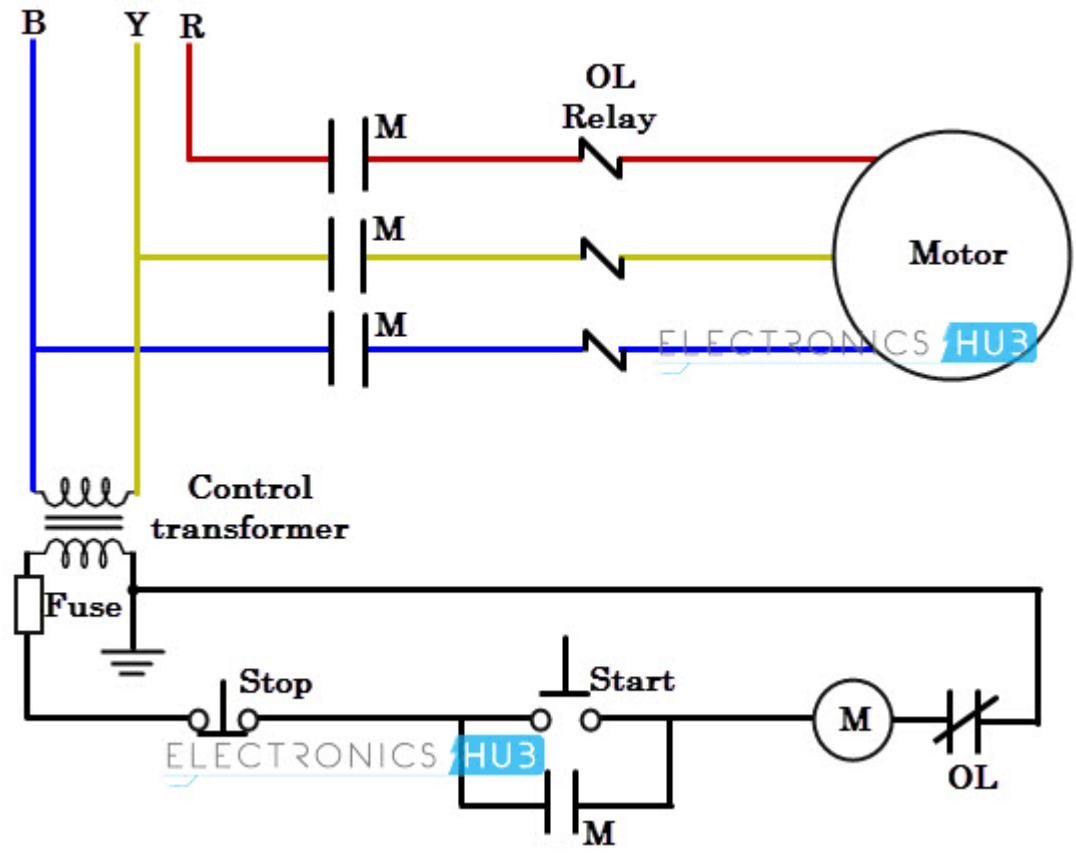

PROCEDURE: -

1. The outline of the wiring diagram is marked on the wooden wiring board.
2. Clips are nailed to the board, following the wiring diagram.
3. Wires are stretched and clamped with the clips.
4. Round blocks are screwed on to the board, as per the diagram.
5. Wires are connected to the holders and the switch, which are then screwed on to the round blocks.
6. Bulb is fitted to the holder.
7. The wiring connections are tested, by giving power supply.

SAFETY PRECAUTIONS: -

1. Electricity has no respect for ignorance. Do not apply voltage or turn-on any device until it has been properly checked.
2. Care should be taken from electrical shocks.
3. Don’t touch the connection points.
4. Avoid loose connection.
5. Don’t work at damped areas and with wet clothing.
6. Handle the lamp carefully

RESULT: -

ELECTRICAL WIRING VIVA QUESTIONS

1. Define electric wiring.
2. Name the safety devices used to protect the electric circuits from overload.
3. Differentiate between a fuse and a circuit breaker.
4. What for a lamp holder is used in an electric circuit?
5. Name the types of lamp holders available in the market.
6. What for a ceiling rose is used?
7. What is meant by an electric circuit?
8. Name the three types of electrical circuits.
9. Name the motor driven household appliances
10. What are the precautions to be taken, while connecting the wires with electrical accessories?
11. What is the difference emergency lamp and indicator lamp?
12. Define the term earthing or grounding.
13. Name the different methods of earthing.
14. How much is the power supply required for house wiring?
15. What is the purpose of choke in the fluorescent tube circuit?
16. What is the purpose of starter in the fluorescent tube circuit?

SOLDERING

EXPERIMENT NO: **DATE:**

Soldering is one method of joining two or more pieces of metals by means of fusible alloy, called solder, applied in the molten state. The melting temperature of the solder should be lower than that of the base metals being joined.

Method of soldering:

The following are the stages involved in soldering work.

1. Clean the surfaces to be soldered.
2. Keep the surfaces to be joined, close together.
3. Apply a thin layer of flux with a brush.
4. Heat the soldering copper to proper temperature.
5. Tack the seam by applying solder at several points.
6. Begin at one end and move the copper bit slowly, adding solder as needed.
7. Allow the joint to cool.
8. Clean the joint and then test the joint for strength.

Advantages:

1. It is the most economical method of joining.
2. It produces leak-proof joint quickly.
3. The temperature involved is very low, when compared to welding. The cost of the equipment is cheap.
4. Soldering can be performed on similar or dis-similar metals.

6. FOUNDRY PRACTICE

Demonstration and practice on Moulding tools and processes, Preparation of Green Sand Moulds for given Patterns

Introduction: -

Foundry practice deals with the process of making casting in moulds, formed in either sand or other material. This is found to be the cheapest method of metal shaping. The process involves the operations of pattern making, sand preparation, molding, melting of metals, pouring in moulds, cooling, shake out, fettling, heat treatment, finishing, and inspection.

Mould is a cavity in a molding core, formed by a pattern. It is similar in shape and size that of the actual casting plus some allowance for shrinkage, machining etc., molding is the process of making molds.

Moulds are classified as: -

Temporary moulds and Permanent moulds

Temporary moulds are made of sand and other binding materials and may be produced either through hand molding (or) machine molding.

Permanent moulds are made of ferrous materials and alloys i.e., cast iron, steel etc.,

Molding Sand: -

Sand is the principle material used in foundry. The principle ingredients of molding sands are

1) Silicon sand 2) Clay 3) Sand

Clay imparts the necessary bonding strength to the molding sand, moisture when added to correct preparation provides the bonding action to the clay sand can withstand high temperature and doesn't react with molten metal.

Natural molding sand is either available in river beds are dug from pits. It possesses and appreciable amount of clay and are used as received with the addition of water. Synthetic sands are prepared by adding clay. Water and other materials to silica sand so that the desirable strength and banding properties are achieved.

Most of molding is done with green sand i.e.; sand containing 6 to 8%, moisture and 10% clay content to give it sufficient bond. Green sand moulds are used for pouring the molten metal – immediately after preparing the moulds. Green sand moulds are cheaper and take less time to prepare. These are used for small and medium size casting.

Parting sand, which is clay tree, fence grained silica sand, is used to keep the green sand from sticking to the pattern and also to prevent the cope and drug from cleaning. Core sand is used for making cores. This is silica missed with core oil and other oddities.

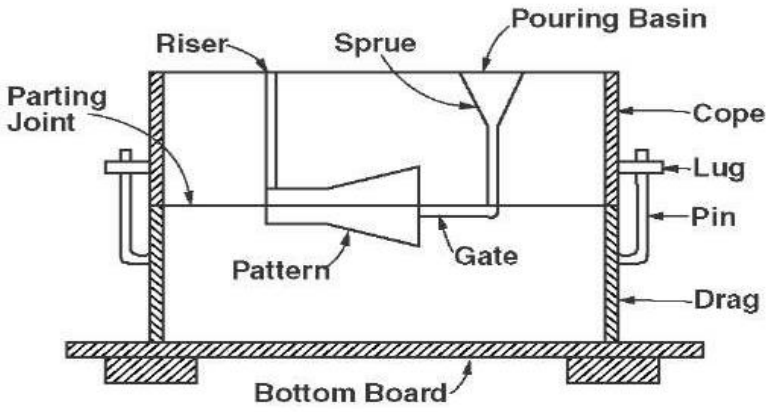

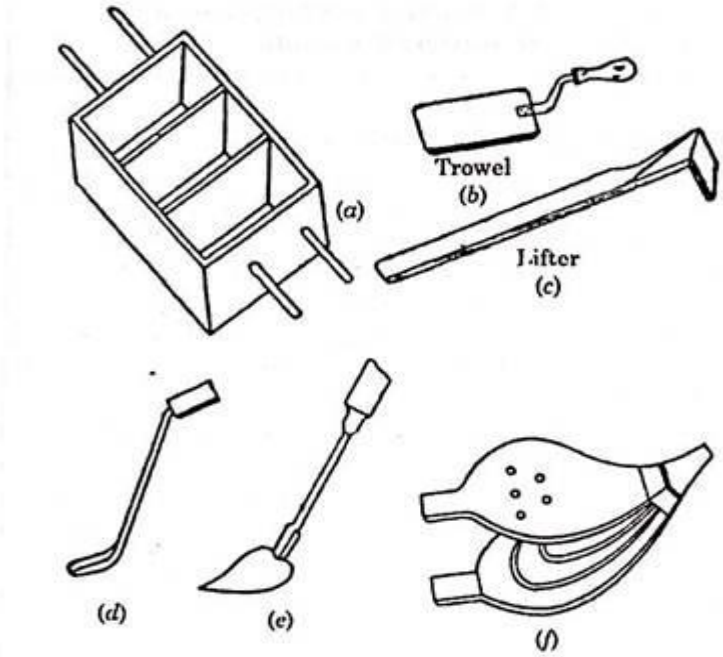

(a) Moulding flask with strengthening cross bars. (b) Trowel (c) Lifter. (d) Slick. (e) Double Ender. (f) Bellows.

Pattern; -

A pattern is the replica of the desired coasting, which when packed in a suitable materials produces a cavity called mould. This cavity when filled with molten metals, produces their desired coasting of the solidification.

Types of pattern; -

Wood are metal patterns are used in foundry practice, single piece, split loose piece and cored patterns are some of the common types.

Tools and equipment; -

The tools are equipment needed for molding are; -

Molding board: -

It is wooden board with smooth surfaces. It supports the flasks and the pattern, while the mould is being made.

Molding Flask: -

It is a base, made of wood or metal, open at both ends. The sand is rammed in after placing the pattern to produce a mould it is made of 2 parts; cope is the top half of the flask, having guides for the aligning paints to enter. Drag is the bottom half of the flask having aligning pins.

Shovel: -

It is used for mixing and tempering molding sand and for transferring the sand in to the flask. It is made of steel blade with a wooden handle.

Rammer: -

It is used for pocking or ramming the sand, around the pattern one of its ends called the peen end, is wedge shaped and is used for packing sand in spaces, pockets and corners in the early stages of ramming. The other end called the But – end has a surface and is used for computing the sand towards the end of molding.

Strike of edge / strike of bar: -

It is a piece of metal or wood with straight edge. It is used remove the excess sand from the mould after ramming to provide a level surface.

Spruce pin: -

It is tapered wooden pin used to make a hole in the cope sand through which the molten metal is poured into the mould.

Riser pin: -

It is tapered wooden pin used to make a hole in the cope sand over the mould cavity for the molten metal to rise and feed the casting to compassable the shrinkage that take place during solidification.

Trowel: -

It is used to smoothen the surface of the mould. It may also be used for reproducing the damaged portion of the mould. A trowel is made in many different styles and sizes each one recallable for a particular hole.

FOUNDRY

ONE STEPPED PATTERN (SINGLE PIECE PATTERN)

EXPERIMENT No: DATE:

Aim: - To prepare a sand mould cavity using One Stepped Shaft (single piece pattern).

Tools required: -

1. Molding board
2. Molding flask
3. Shovel
4. Riddle
5. Rammer
6. Strike-off bar or Strike Edge
7. Sprue pin
8. Riser pin
9. Trowel
10. Spike or Draw pin
11. Slick
12. Lifters
13. Gate cutter
14. Bellows
15. Vent rod

Material required: -

1. Molding sand
2. Parting sand
3. Dum-Bell

Sequence of operation: -

1. Sand preparation
2. Sand mixing
3. Pouring
4. Finishing

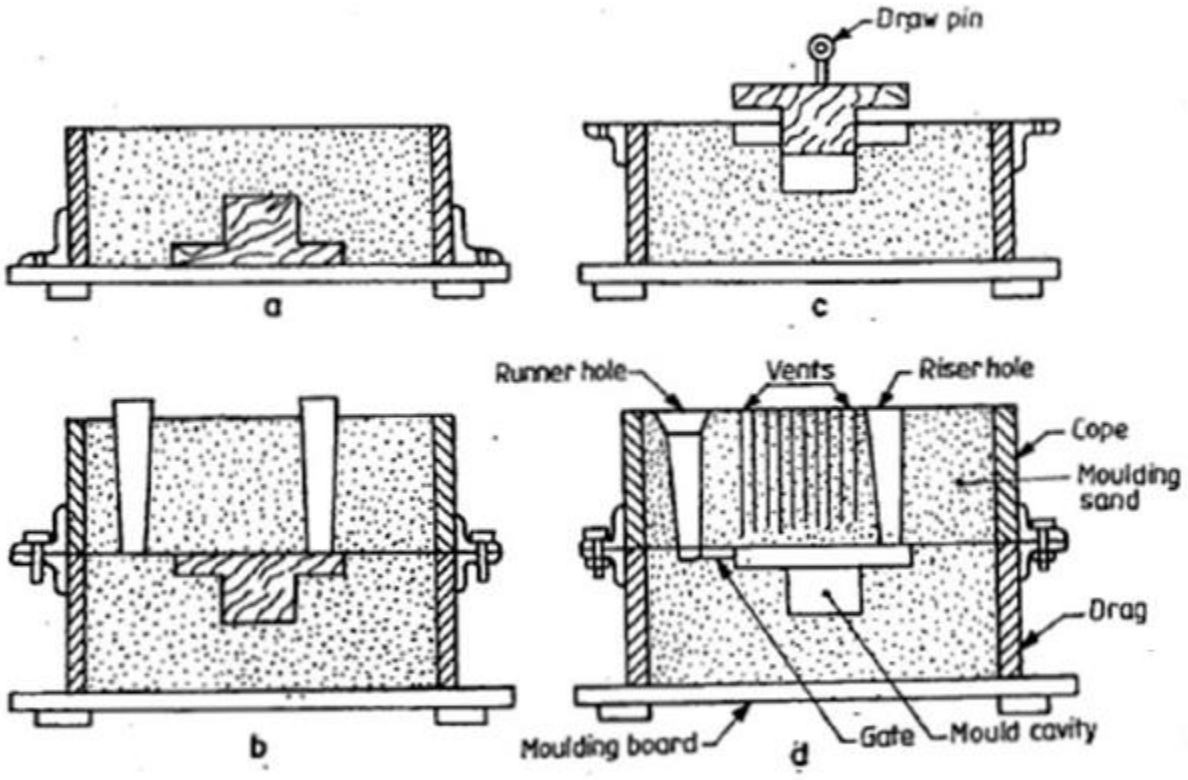

Mold for a solid flange

Procedure: -

1. Place the pattern on the molding board, with its flat side on the board.
2. Place the drag over the board, after giving a clay wash inside.
3. Sprinkle the pattern and molding board, with parting sand.
4. Allow loose sand, preferably through a riddle over the pattern, unit it is covered to a depth of 2 to 3 cm.
5. Pack the molding sand around the pattern and into the corners of the flask, with fingers.
6. Place some more sand in the flask and pack the pattern with a rammer, using first the peen end and then butt end.
7. Strike-off the excess sand from the top surface of the drag with the strike-off bar.
8. Turn the drag upside down.
9. Blow-off the loose sand particles with the bellows and smoothen the upper surface.
10. Place the cope on to the drag in position. Locate riser pin on the highest point of the pattern.

11. Place the sprue pin at about 5 to 6 cm from the pattern on the other side of the riser pin.
12. Sprinkle the upper surface with parting sand.
13. Repeat steps 3 to 7, approximately.
14. Make holes with the vent rod to about 1 cm from the pattern.
15. Remove the sprue and riser pins by carefully drawing them out. Funnel shaped hole is made at the top of the sprue hole, called the pouring cup.
16. Lift the cope and place it aside on its edge.
17. Insert the draw pin into the pattern. Wet the edges around the pattern. Loosen the pattern by rapping. Then draw the pattern straight up.
18. Adjust and repair the mold by adding bits of sand, if necessary.
19. Cut gate in the drag from the sprue to the mold. Blow off any loose sand particles in the mold.
20. Close the mold by replacing the cope and placing weights on it.

Precautions:-

1. Do not get the sand too wet. Water is an enemy of molten metals.
2. Provide adequate ventilation to remove smoke and fumes.
3. Never stand near or look over the mold during the pouring because of the molten metal might be too hot.
4. Do not shake out a casting too hastily, which may result in second and third degree burns.

Result: - A sand mold cavity is prepared by using one–Stepped Shaft.

FOUNDRY

DUM-BELL (SPLIT PIECE PATTERN)

EXPERIMENT No: DATE:

Aim: - To prepare a sand mould using given split pattern with core for a grooved pulley or Dum-Bell (split piece pattern).

Tools required: -

1. Molding board
2. Molding flask
3. Shovel
4. Riddle
5. Rammer
6. Strike-off bar or Strike Edge
7. Sprue pin
8. Riser pin
9. Trowel
10. Spike or Draw pin
11. Slick
12. Lifters
13. Gate cutter
14. Bellows
15. Vent rod

Material required: -

1. Molding sand
2. Parting sand
3. Dum-Bell

Sequence of operation: -

1. Sand preparation
2. Sand mixing
3. Pouring
4. Finishing

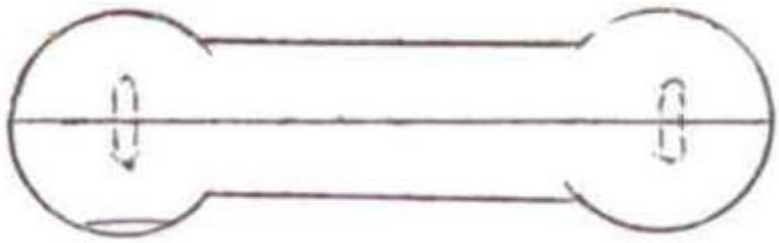

Fig: 1 Dum – Bell pattern

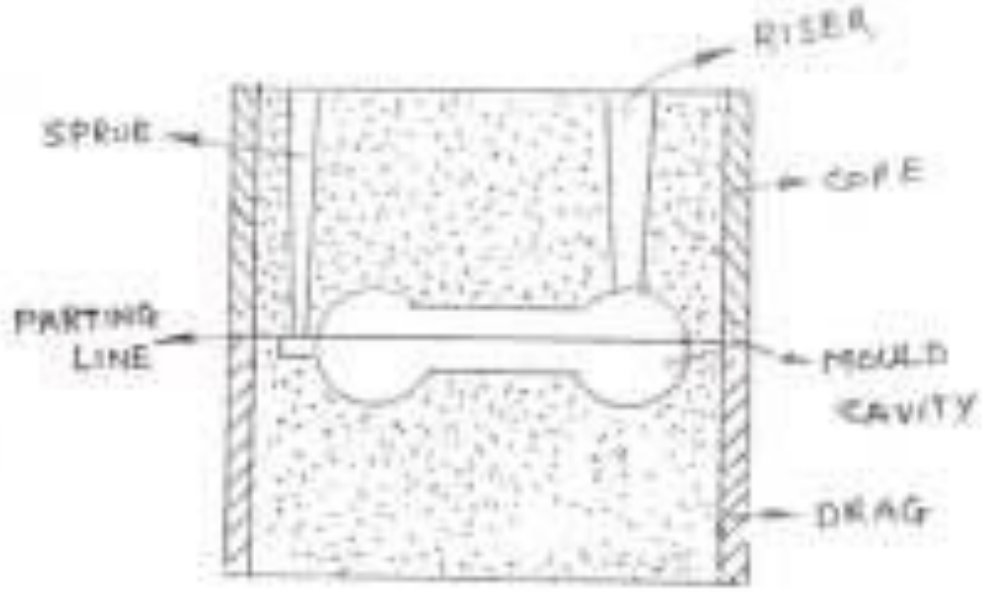

Fig: 2 mould of two piece pattern

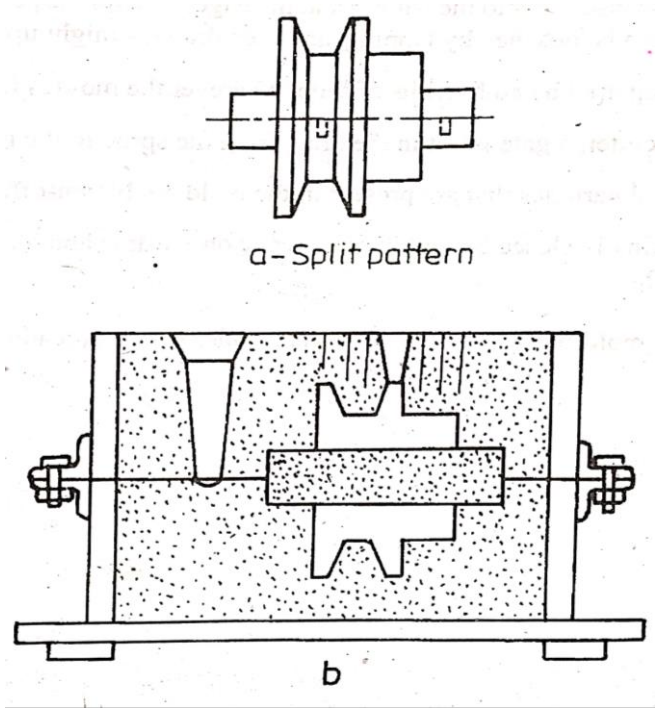

Split Pattern with core (Mold for a grooved pulley)

Procedure: -

1. Place the pattern on the molding board, with its flat side on the board.
2. Place the drag over the board, after giving a clay wash inside.
3. Sprinkle the pattern and molding board, with parting sand.
4. Allow loose sand, preferably through a riddle over the pattern, unit it is covered to a depth of 2 to 3 cm.
5. Pack the molding sand around the pattern and into the corners of the flask, with fingers.
6. Place some more sand in the flask and pack the pattern with a rammer, using first the peen end and then butt end.
7. Strike-off the excess sand from the top surface of the drag with the strike-off bar.
8. Turn the drag upside down.
9. Blow-off the loose sand particles with the bellows and smoothen the upper surface.
10. Place the cope on to the drag in position. Locate riser pin on the highest point of the pattern.
11. Place the sprue pin at about 5 to 6 cm from the pattern on the other side of the riser pin.
12. Sprinkle the upper surface with parting sand.
13. Repeat steps 3 to 7, approximately.
14. Make holes with the vent rod to about 1 cm from the pattern.
15. Remove the sprue and riser pins by carefully drawing them out. Funnel shaped hole is made at the top of the sprue hole, called the pouring cup.
16. Lift the cope and place it aside on its edge.
17. Insert the draw pin into the pattern. Wet the edges around the pattern. Loosen the pattern by rapping. Then draw the pattern straight up.
18. Adjust and repair the mold by adding bits of sand, if necessary.
19. Cut gate in the drag from the sprue to the mold. Blow off any loose sand particles in the mold.
20. Close the mold by replacing the cope and placing weights on it.

Precautions:-

1. Do not get the sand too wet. Water is an enemy of molten metals.
2. Provide adequate ventilation to remove smoke and fumes.
3. Never stand near or look over the mold during the pouring because of the molten metal might be too hot.
4. Do not shake out a casting too hastily, which may result in second and third degree burns.

Result: - A sand mold cavity is prepared by using Dum-Bell.

7. WELDING

Demonstration and practice on Arc Welding and Gas welding
Preparation of Lap joint and Butt joint.

INTRODUCTION:

Welding is the process of joining similar metals by the application of heat, with or without application of pressure or filler metal, in such a way that the joint is equivalent in composition and characteristics of the metals joined. In the beginning, welding was mainly used for repairing all kinds of worn or damaged parts. Now, it is extensively used in manufacturing industry, construction industry(construction of ships, tanks, locomotives and automobiles) and maintenance work, replacing riveting and bolting, to a greater extent.

The various welding processes are:

1. Electric arc welding,
2. Gas welding
3. Thermal welding
4. Electrical Resistance welding and
5. Friction welding

However, only electric arc welding process is discussed in the subject point of view.

Electric arc welding

Arc welding is the welding process, in which heat is generated by an electric arc struck between an electrode and the work piece. Electric arc is luminous electrical discharge between two electrodes through ionized gas.

Any arc welding method is based on an electric circuit consisting of the following parts:

a. Power supply (AC or DC);

b. Welding electrode;

c. Work piece;

d. Welding leads (electric cables) connecting the electrode and work piece to the power supply.

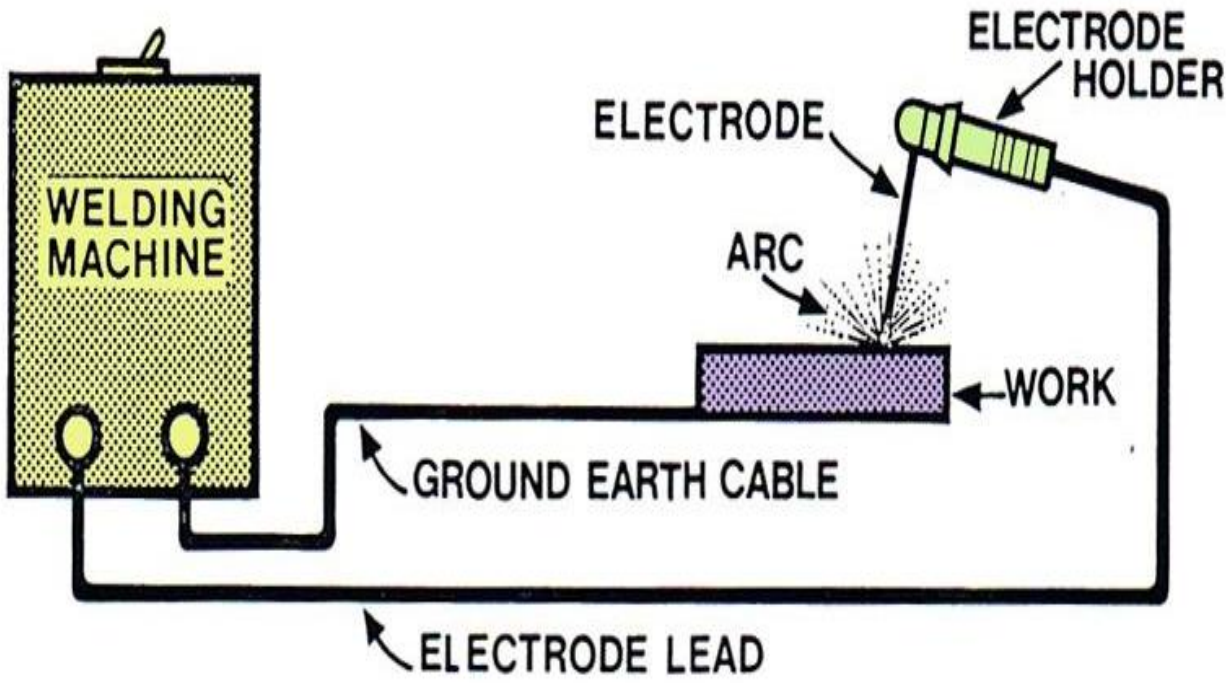

Fig:1 Arc welding set up

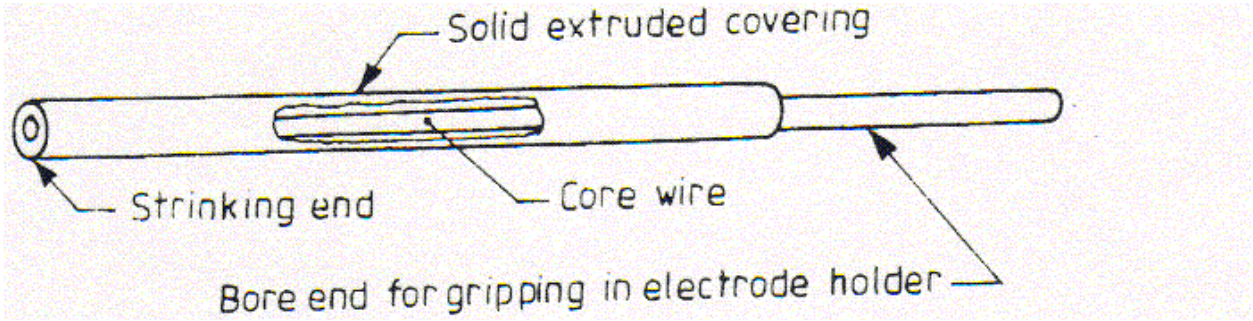

Fig :2 parts of an electrode

Electric arc between the electrode and work piece closes the electric circuit. The arc temperature may reach 10000°F (5500°C), which is sufficient for fusion the work piece edges and joining them. When a long joint is required the arc is moved along the joint line. The front edge of the weld pool melts the welded surfaces when the rear edge of the weld pool solidifies forming the joint.

Transformers, motor generators and rectifiers' sets are used as arc welding machines. These machines supply high electric currents at low voltage and an electrode is used to produce the necessary arc. The electrode serves as the filler rod and the arc melts the surface so that, the metals to be joined are actually fixed together.

Sizes of welding machines are rated according to their approximate amperage capacity at 60% duty cycle, such as 150,200,250,300,400,500 and 600 amperes. This amperage is the rated current output at the working terminal.

Transformers

The transformers type of welding machine produces A.C current and is considered to be theleast expensive. It takes power directly from power supply line and transforms it to the voltage required for welding. Transformers are available in single phase and three phases in the market.

Motor generators

These are D.C generators sets, in which electric motor and alternator are mounted on the same shaft to produce D.C power as pert the requirement for welding. These are designed to produce D.C current in either straight or reversed polarity. The polarity selected for welding depends upon the kind of electrode used and the material to be welded.

Rectifiers

These are essentially transformers, containing an electrical device which changes A.C into D.C by virtue of which the operator can use both types of power (A.C or D.C, but only one at a time).In addition to the welding machine, certain accessories are needed for carrying out the welding work.

Welding cables

Two welding cables are required, one from machine to the electrode holder and the other, from the machine to the ground clamp. Flexible cables are usually preferred because of the case of usingand coiling the cables. Cables are specified by their current carrying capacity, say 300 A, 400 A, etc.

Electrodes

Filler rods are used in arc welding are called electrodes. These are made of metallic wire called core wire, having approximately the same composition as the metal to be welded. These are coated uniformly with a protective coating called flux. While fluxing an electrode; about 20mm of length is left at one end for holding it with the electrode holder. It helps in transmitting full current from electrode holder to the front end of the electrode coating. Flux acts as an insulator of electricity. In general, electrodes are classified into five main groups; mild steel, carbon steel, special alloy steel, cast iron and non-ferrous. The greatest range of arc welding is done with electrodes in the mild steel group. Various constituents like titanium oxide, potassium oxide, cellulose, iron or manganese, Ferro silicates, carbonates, gums, clays, asbestos, etc., are used as coatings on electrodes. While welding, the coating or flux vaporizes and provides a gaseous shield to prevent atmospheric attack. The size of electrode is

measured and designated by the diameter of the core wire in SWG andlength, apart from the brand and code names; indicating the purpose for which there are most suitable

Electrodes may be classified on the basis of thickness of the coated flux. As

1. Dust coated or light coated
2. Semi or medium coated and
3. Heavily coated or shielded

Electrodes are also classified on the basis of materials, as

1. Metallic and
2. Non-metallic or carbon

Metallic arc electrodes are further sub-divided into

1. Ferrous metal arc electrode (mild steel, low/medium/high carbon steel, cast iron, stainless steel, etc)
2. Non-ferrous metal arc electrodes (copper, brass, bronze, aluminum, etc).

In case of non-metallic arc electrodes, mainly carbon and graphite are used to make the electrodes.

Fig :3 Electrode holder

Fig :4 Ground Clamp

Fig :5Wire brush

Fig :6Chipping hammer

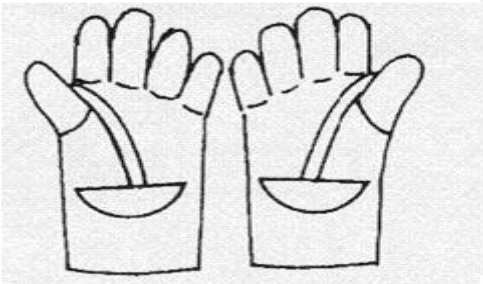

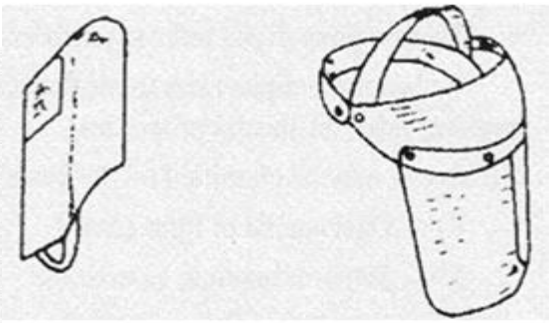

Fig :7Hand gloves **Fig :8Face shield**

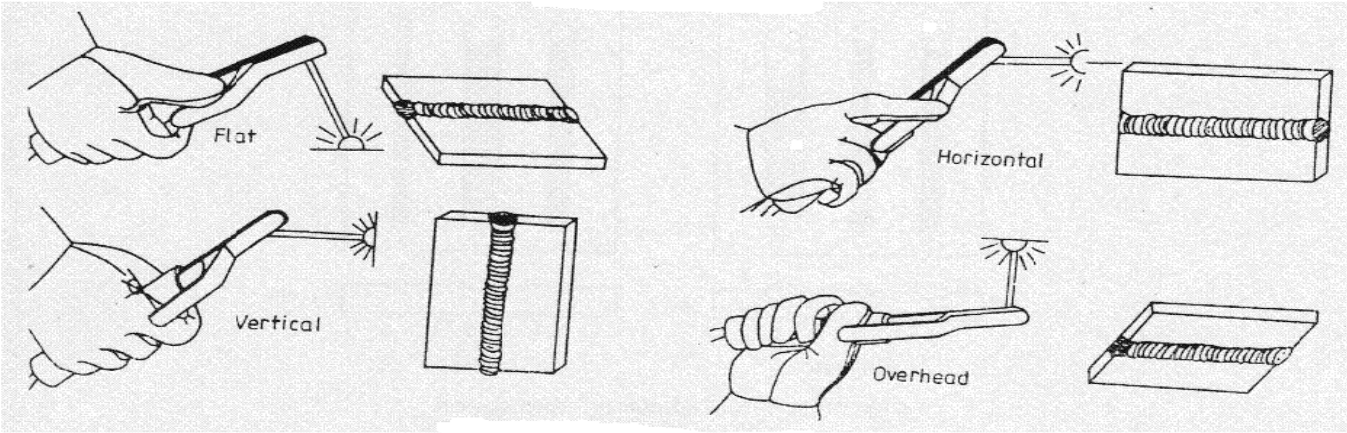

Fig: 9Weld positions

WELDING TOOLS

Electrode holder

The electrode holder is connected to the end of the welding cable and holds the electrode. Itshould be light, strong and easy to handle and should not become hot while in operation. Figure shows one type of electrode holder. The jaws of the holder are insulated, offering protection from electric shock.

Ground clamp

It is connected to the end of the ground cable and is clamped to the work or welding table to complete the electric circuit. It should be strong and durable and give a low resistance connection.

Wire brush and chipping hammer

A wire brush is used for cleaning and preparing the work for welding. A chipping hammer is used for removing slag formation on welds. One end of the head is sharpened like a cold chisel and the other, to a blunt, round point. It is generally made of tool steel. Molten metal dispersed around the welding heads, in the form of small drops, is known as spatter. When a flux coated electrode is used in welding process, then a layer of flux material is formed over the welding bead which contains the impurities of weld material. This layer is known as slag. Removing the spatter and slag formed on and around the welding beads on the metal surface is known as chipping.

Welding table and cabin

It is made of steel plate and pipes. It is used for positioning the parts to be welded properly.

Welding cabin is made-up by any suitable thermal resistance material, which can isolate the surrounding by the heat and light emitted during the welding process. A suitable draught should also be provided for exhausting the gas produced during welding.

Face shield

A face shield is used to protect the eyes and face from the rays of the arc and from spatter or flying particles of hot metal. It is available either in hand or helmet type. The hand type is convenient to use wherever the work can be done with one hand. The helmet type though not comfortable to wear, leaves both hands free for the work.

Shields are made of light weight non-reflecting fiber and fitted with dark glasses to filter out the Harmful rays of the arc. In some designs, a cover glass is fitted in front of the dark lens to protect it from spatter.

Hand gloves

These are used to protect the hands from electric shocks and hot spatters

TECHNIQUES OF WELDING

Preparation of work

Before welding, the work pieces must be thoroughly cleaned of rust, scale and other foreign Material. The piece for metal generally welded without beveling the edges, however, thick work piece should be beveled or out to ensure adequate penetration and fusion of all parts of the weld. But, in either case, the parts to be welded must be separated slightly to allow better penetration of the weld. Before commencing the welding process, the following must be considered.

a) Ensure that the welding cables are connected to proper power source.

b) Set the electrode, as per the thickness of the plate to be welded.

c) Set the welding current, as per the size of the electrode to be used.

WELDING POSITIONS

Depending upon the location of the welding joints, appropriate position of the electrode and hand movement is selected. The figure shows different welding positions.

Flat position welding

In this position, the welding is performed from the upper side of the joint, and the face of the weld is approximately horizontal. Flat welding is the preferred term; however, the same position is sometimes called down hand.

Horizontal position welding

In this position, welding is performed on the upper side of an approximately horizontal surface and against an approximately vertical surface.

Vertical position welding

In this position, the axis of the weld is approximately vertical as shown in figure.

Overhead position welding

In this welding position, the welding is performed from the underside of a joint

WELDING

(Lap joint)

EXPERIMENT No: **DATE:**

Aim

To make a double lap joint, using the given mild steel pieces and by arc welding.

Material used: Two mild steel pieces of 100X40X6 mm.

Tools and equipment used

1. Arc welding machine,
2. Mild steel electrodes,
3. Electrode holder,
4. Ground clamp,
5. flat nose Tong,
6. Face shield,
7. Apron,
8. Hand gloves,
9. Metallic work Table,
10. Bench vice,
11. Rough flat file,
12. Try square,
13. Steel rule,
14. Wire brush,
15. Ball peen hammer,
16. Chipping hammer.

Operations to be carried out

1. Cleaning the work pieces
2. Tack welding
3. Full welding
4. Cooling
5. Chipping
6. Finishing

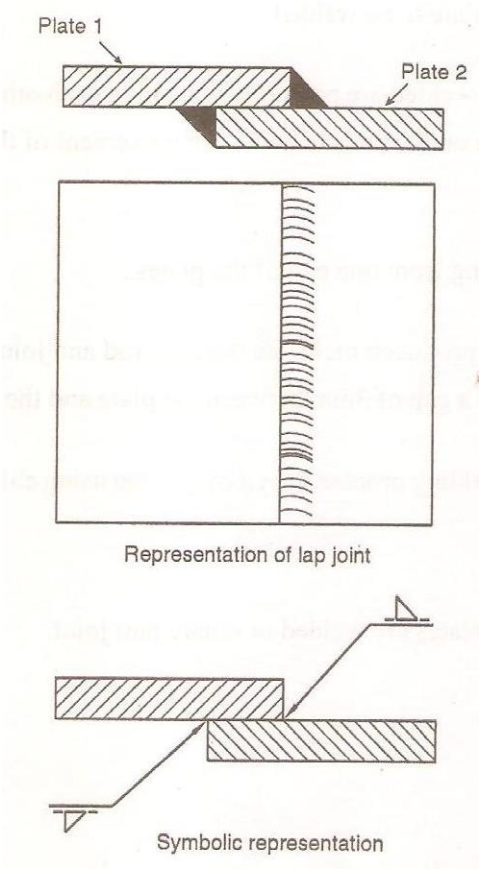

Fig: lap joint

Procedure:

1. Take the two mild steel pieces of given dimensions and clean the surfaces thoroughly from rust, dust particles, oil and grease.
2. Remove the sharp corners and burrs by filing or grinding and prepare the work pieces.
3. The work pieces are positioned on the welding table, to form a lap joint with the required over lapping.
4. The electrode is fitted in to the electrode holder and the welding current is set to a proper value.
5. The ground clamp is fastened to the welding table.
6. Wearing the apron, hand gloves, using the face shield and holding the over lapped pieces the arc is struck and the work pieces are tack-welded at the ends of both the sides
7. The alignment of the lap joint is checked and the tack-welded pieces are reset, if required.
8. Welding is then carried out throughout the length of the lap joint, on both the sides.
9. Remove the slag, spatters and clean the joint.

Precautions:

1. Use goggles, gloves in order to protect the human body.
2. Maintain the constant arc length.
3. Always turn of the machine when leaving the work.
4. Ensure proper insulation of the cables and check for openings.
5. Never look at the arc with the naked eye
6. Prevent welding cables from coming in contact with hot metal, water, oil or grease. Avoid dragging the cables around sharp corners.
7. Apply air drops after welding is over for the day, to relieve the strain on the eyes.

Result The lap joint is thus made, using the tools and equipment as mentioned above.

WELDING

(Butt Joint)

EXPERIMENT No: **DATE:**

Aim: preparation of butt joint as shown in figure using shielded metal arc welding process.

Material required: 2m.s flat pieces of given size.

Tools required:

1. welding transformer
2. connecting cables
3. electrode holder
4. ground clamp
5. electrodes
6. hipping hammer
7. Welding shield etc.

Procedure:

1. The given metallic pieces filled to the desired size.
2. On both pieces beveled in order to have V groove.
3. The metallic pieces are thoroughly cleaned from rust grease, oil, etc.
4. The metallic pieces are connected to terminals of Trans former.
5. Select electrode dia based on thickness of work piece and hold it on the electrode holder. Select suitable range of current for selected dia.
6. Switch on the power supply and initiates the arc by either striking arc method or touch and drag method.
7. Take welding to be done before full welding.
8. In full welding process after completion one part before going to second part. Slag is removed from the weld bed. With the metal wire brush or chipping hammer.
9. Then the above process will be repeated until to fill the groove with weld bed or weld metal.

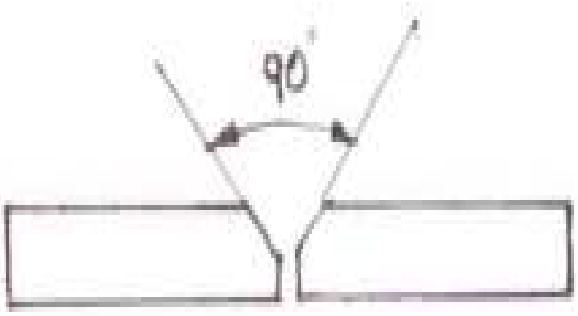

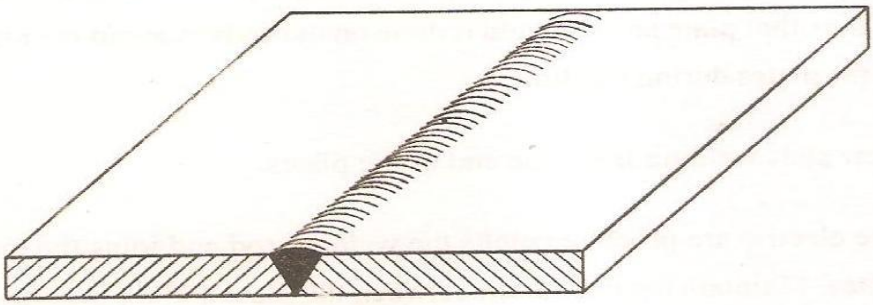

Representation of single V butt joint

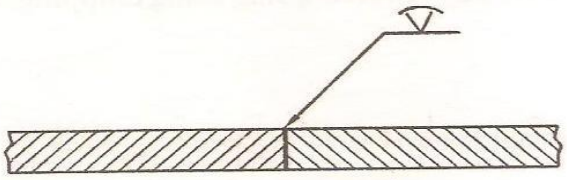

Symbolic representation

V – butt joint

Precautions:

1. Use goggles, gloves in order to protect the human body.
2. Maintain the constant arc length.
3. Always turn of the machine when leaving the work.
4. Ensure proper insulation of the cables and check for openings.
5. Never look at the arc with the naked eye
6. Prevent welding cables from coming in contact with hot metal, water, oil or grease. Avoid dragging the cables around sharp corners.
7. Apply air drops after welding is over for the day, to relieve the strain on the eyes.

Result: butt joint is prepared as shown in figure by using arc-welding process.

T JOINT

EXPERIMENT No: **DATE:**

Aim: preparation of T joint as shown in figure using shielded metal arc welding process.

Material required: 2m.s flat pieces of given size.

Tools required:

1. welding transformer,
2. connecting cables,
3. electrode holder,
4. ground clamp,
5. electrodes,
6. hipping hammer,
7. Welding shield etc.

Procedure:

1. The given metallic pieces filled to the desired size.

3. The metallic pieces are thoroughly cleaned from rust grease, oil, etc.

4. The metallic pieces are connected to terminals of Trans former.

5. Select electrode dia based on thickness of work piece and hold it on the electrode holder. Select suitable range of current for selected dia.

6. Switch on the power supply and initiates the arc by either striking arc method or touch and drag method.

7. Take welding to be done before full welding.

8. In full welding process after completion of one part, before going to second part. Slag is removed from the weld bed. With the metal wire brush or chipping hammer.

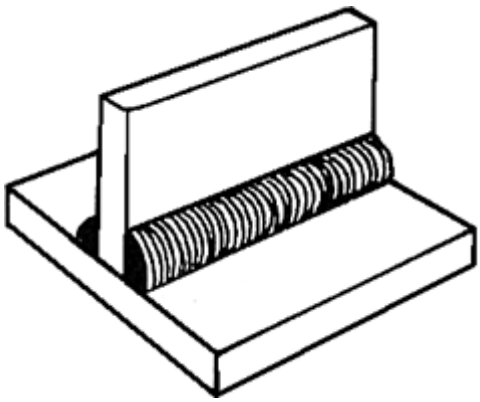

T Joint

Precautions:

1. Use goggles, gloves in order to protect the human body.
2. Maintain the constant arc length.
3. Always turn of the machine when leaving the work.
4. Ensure proper insulation of the cables and check for openings.
5. Never look at the arc with the naked eye
6. Prevent welding cables from coming in contact with hot metal, water, oil or grease. Avoid dragging the cables around sharp corners.
7. Apply air drops after welding is over for the day, to relieve the strain on the eyes.

Result: butt joint is prepared as shown in figure by using arc-welding process.

GAS WELDING

Oxyacetylene flame is commonly used for gas welding. It consists of the supply of the oxygen and acetylene under pressure in cylinders, pressure regulators, a torch, hoses, and accessories like Goggles and a lighter. The oxygen and acetylene cylinders are connected to the troche through pressure regulators and hoses as shown in the figure. The regulators consist of two pressure gauges, one for indicating the pressure within the cinder and the other shows the [pressure of the gas fed in to the torch, which may be regulated. The torch mixers the two gases and the flame controlled by adjusting the oxygen and acetylene supply.

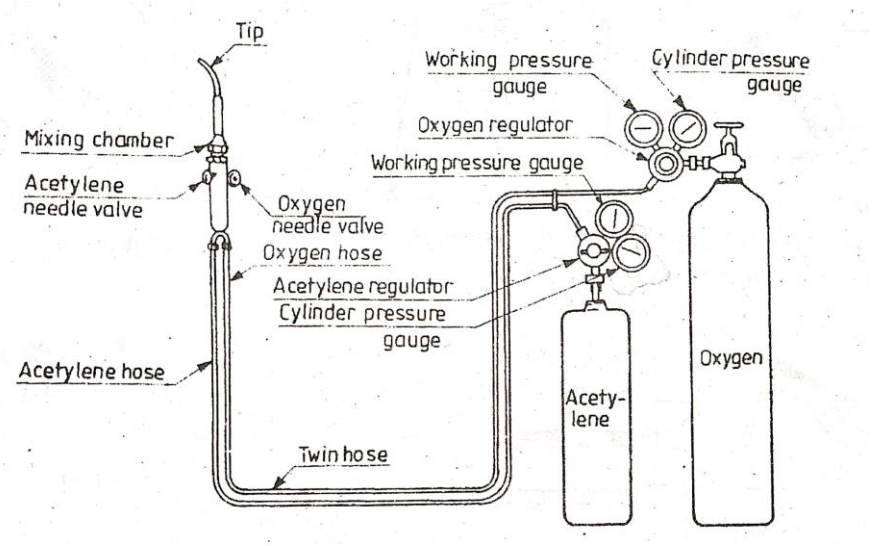

LAP JOINT

EXPERIMENT No: **DATE:**

Aim: preparation of lap joint as shown in figure using oxyacetylene gas welding process.

Material required: 2m.s flat pieces of given size.

Tools required:

1. Gas welding equipment.
2. Goggles, Gloves and apron
3. Filler rod

Procedure:

1. Prepare the work pieces to be welded and place them in proper position on the welding table
2. Wear goggles, gloves and apron
3. Select proper size tip for the job and fix it to the torch
4. Select the filler rod of recommended size
5. Adjust the welding equipment and light the torch
6. Adjust the torch for neutral flame
7. Hold the torch, with the inner cone about 3mm away from the metal and tack weld the pieces at either end
8. Starting from one end, weld along the edge with a zig-zag torch movement. Add the filler metal to the joint as welding progresses. The two techniques of the gas welding are shown in fig.

LEFT WARD WELDING

In leftward welding, most of the heat is absorbed by the filler material and hence it is preferred in welding thin sheets up to 6mm thick.

RIGHT WARD WELDING

In right ward welding, most of the heat is absorbed by the base metal and So it is preferred in welding thick sheets up to 6mm – 25mm thick.

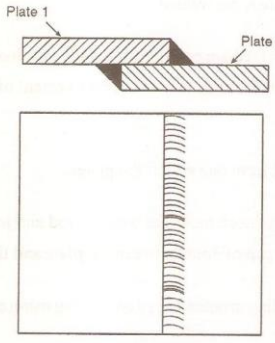

Representation of lap joint

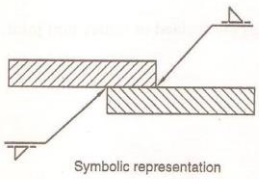

Symbolic representation

Precautions:

1. Always wear welding goggles while doing gas welding
2. Always use the spark lighter to light the torch and never use a match
3. Do not allow blow pipe to heat the cylinders, hoses or any other equipment
4. Do not allow the hose to become excessively warm
5. Do not remove the spanner user for operating the valve. Always keep it with the cylinders
6. Secure cylinder in use against falling, which may knock of valve
7. To test the leakage in a valve or hose use soap water but not a lighted match

RESULT:

BUTT JOINT

EXPERIMENT No: **DATE:**

Aim: preparation of butt joint as shown in figure using oxyacetylene gas welding process.

Material required: 2m.s flat pieces of given size.

Tools required:

1. Gas welding equipment.
2. Goggles, Gloves and apron
3. Filler rod

Procedure:

1. Prepare the work pieces to be welded and place them in proper position on the welding table
2. Wear goggles, gloves and apron
3. Select proper size tip for the job and fix it to the torch
4. Select the filler rod of recommended size
5. Adjust the welding equipment and light the torch
6. Adjust the torch for neutral flame
7. Hold the torch, with the inner cone about 3mm away from the metal and tack weld the pieces at either end
8. Starting from one end, weld along the edge with a zig-zag torch movement. Add the filler metal to the joint as welding progresses. The two techniques of the gas welding are shown in fig.

LEFT WARD WELDING

In leftward welding, most of the heat is absorbed by the filler material and hence it is preferred in welding thin sheets up to 6mm thick.

RIGHT WARD WELDING

In right ward welding, most of the heat is absorbed by the base metal and So it is preferred in welding thick sheets up to 6mm – 25mm thick.

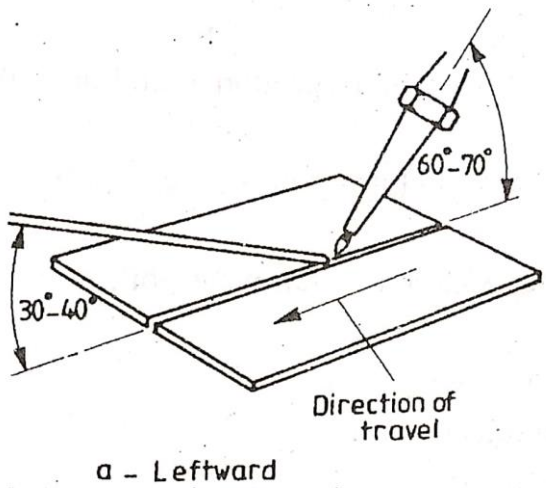

a – Leftward

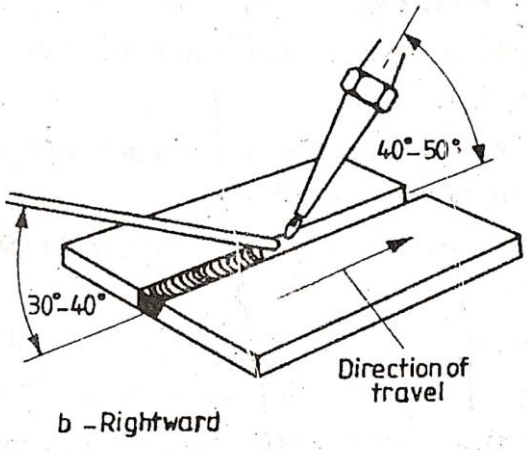

b – Rightward

Techniques of Gas Welding

Precautions:

1. Always wear welding goggles while doing gas welding
2. Always use the spark lighter to light the torch and never use a match
3. Do not allow blow pipe to heat the cylinders, hoses or any other equipment
4. Do not allow the hose to become excessively warm
5. Do not remove the spanner user for operating the valve. Always keep it with the cylinders
6. Secure cylinder in use against falling, which may knock of valve
7. To test the leakage in a valve or hose use soap water but not a lighted match

RESULT:

8.PLUMBING

Demonstration and practice of Plumbing tools, Preparation of Pipe joints with coupling for same diameter and with reducer for different diameters.

INTRODUCTION

Plumbing deals with the laying of a pipeline. A craftsman may be perfectly proficient with the hammer, saw and other tools, but the faces difficulties with leaking pipes and overflowing toilets. Many people rush to a plumber on seeking a tripping pipe, but a person with a little knowledge of the sanitary system can control this problem easily, saving time and, one with help of few tools.

STUDY OF PLUMBING TOOLS

The tools used by a plumber can be classified as follows

1. Pipe wrench
2. Pipe vice
3. Pipe cutter
4. Hacksaw
5. Dies

1. Pipe wrench

A pipe wrench is used for holding and turning the pipes, rods and machine parts.

Wrenches are classified as follows.1. Fixed wrenches 2. Adjustable wrenches.

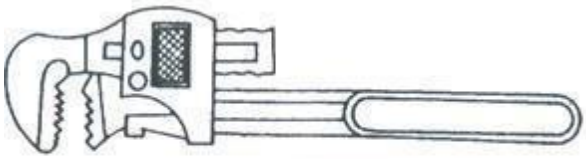

Pipe wrench.

2. Pipe vice

A pipe vice is fitted on the work bench. This has a set of jaws to grip the pipe and prevent it from turning while cutting, threading and fitting of bends, couplings etc. The yoke vice is commonly used in plumbing used in plumbing practice.

3. Pipe cutter

The pipe cutter mainly consists of three wheels which are hardened with sharp cutting edges along their periphery. Of these three wheels, one can be adjusted to any desired distance to accommodate different size of pipes. After adjusting the cutter on a pipe, it is around the pipe, so that the cutter wheels cut the pipe along a circle as shown in the figure.

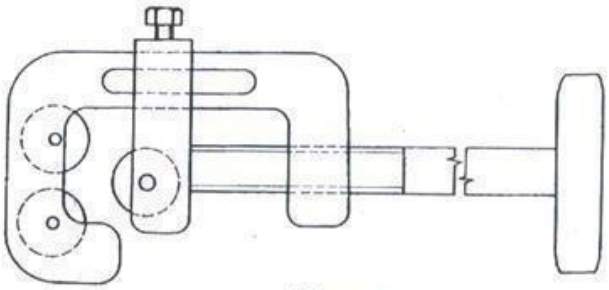

Pipe cutter.

4. Hack saw

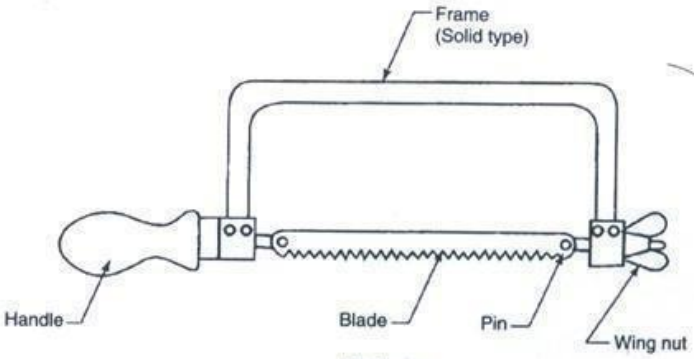

Hacksaw.

A hacksaw is used for cutting metal rods, bars, pipes, etc.

5. Dies

It is used for cutting external thread on pipes. Threads are produced in various shape and

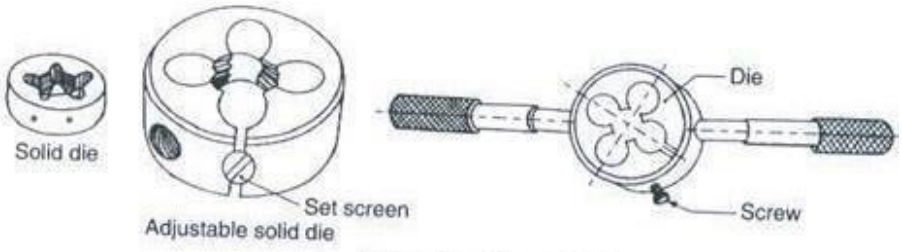

Threading dies and taps.

sizes which are used for fitting inside a handle.

PIPE FITTINGS

Pipe fittings are made up of wrought iron. The size of pipe fitting is designated by the size of the pipe on which it fits. Some of the common pipe fittings are shown in figure

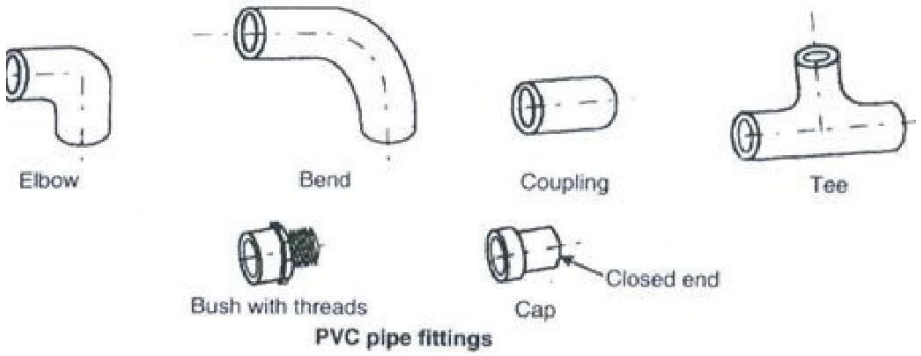

PVC pipe fittings

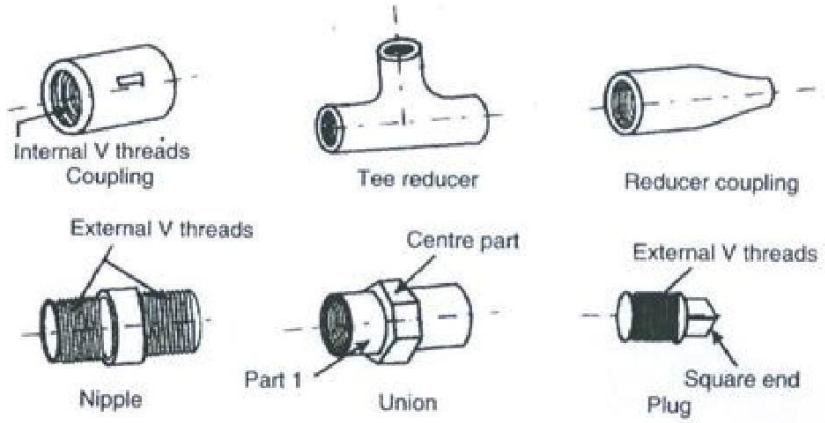

Pipe fittings.

1. Coupling

It is a short a cylindrical sleeve with internal threads throughout. A couplings is used for joining two pipes in a straight and bend where at least one pipe can be turned.

2. Union

A union is used for joining two pieces of pipes, where either can be turned. It consists of three parts, two parts joint can be screwed, in to two pipe ends, and the third on for tightening called centre part.

3. Nipple

A nipple is a short piece of pipe with external threads at both ends. It is used to make up the required length of a pipe line.

4. Elbow

An elbow is to make an angle between adjacent pipes.

5.Tee

A tee is a fitting that has one side outlet at a right angle to the run. It is used for

a single outlet branch pipe.

5. Reducer

It is used to connect two different sized of pipes

6. Plug

It is used to screw on to a threaded opening, for closing it temporarily.

VALVES

Valves are used for regulating the flow of fluid through a pipe. The commonly used valves in plumbing's are

1. Gate valve 2.Globe valve 3. Plug valve

4. Check valve 5. Air relief valve.

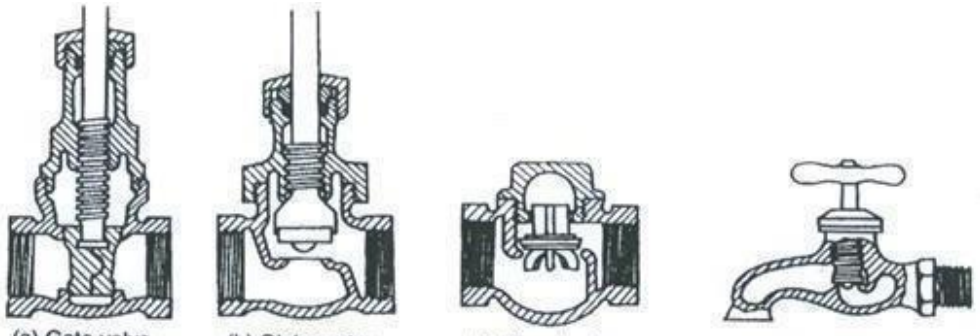

Valves.

TYPES OF PIPE JOINTS

1. Bell and spigot joints

A connection between two sections of pipe i.e. the straight spigot end of one section is inserted into the flared out end of the adjoining section. The joint is sealed by a sealing

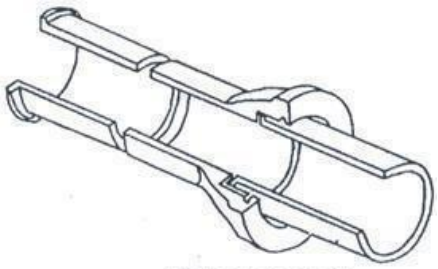

Bell and spigot joints.

component.

2. Flanged joints

A flanged joint helps to connect and disconnect two pipes as per the need. A similar

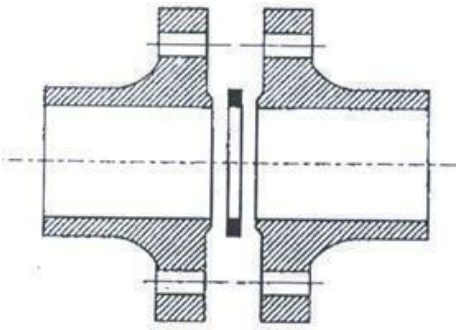

Flange joint.

example is as shown in figure.

3. Threaded joints

Threads are formed in a pipe, flange coupling to connect them with each other and these joints are called threaded joints.

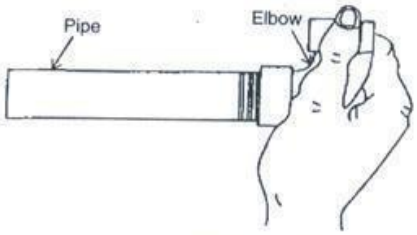

Threaded joint.

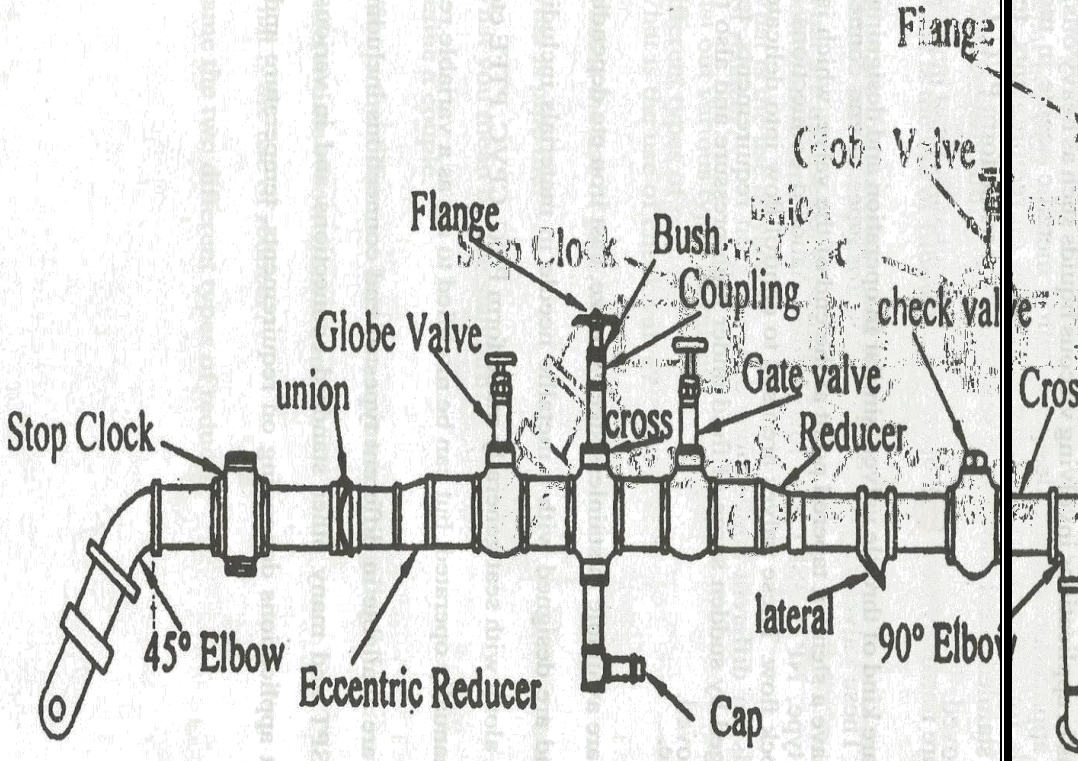
Flange
Bush
Coupling
Globe Valve
union
Gate valve
Stop Clock
cross
Reducer
lateral
45° Elbow
Eccentric Reducer
Cap

PIPE THREADING

Ex.No: Date

Aim

To cut the threads at the end of the given PVC pipe by using a pipe die and to make the Plumbing.

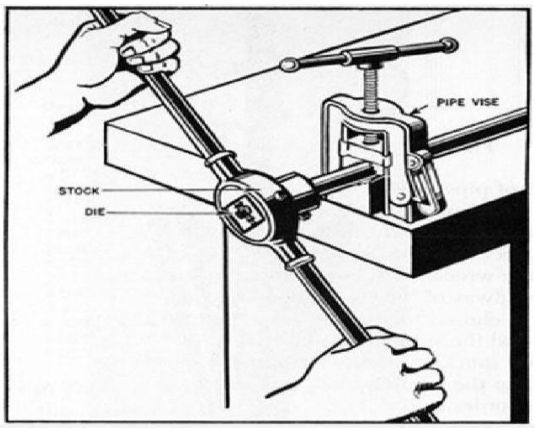

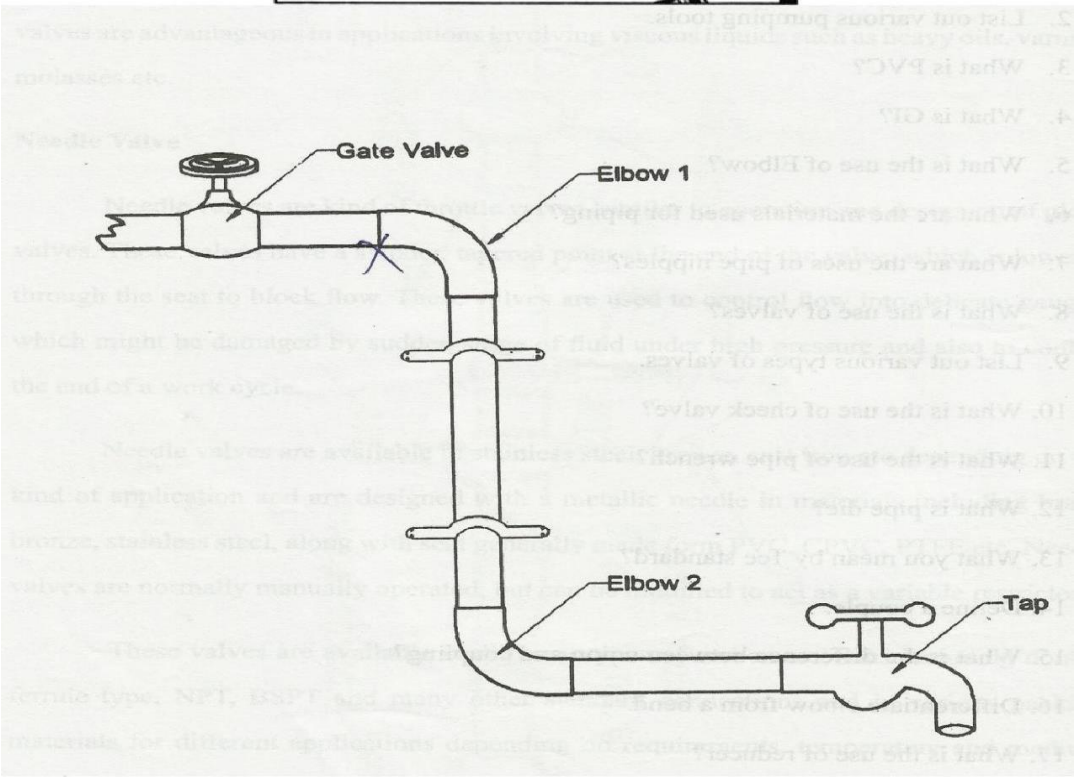

Material Required

1. PVC pipe
2. Elbows
3. Tap
4. Valve
5. Clamps

Tools Required

1. Pipe vice
2. Die
3. Die stock
4. Measuring scale

Procedure

1. The required diameter pipes were picked and cut to the desired length
2. The cut pipe is securely clamped in the pipe vice
3. Proper size of die stock and die is selected. It is inserted and aligned into the stock
4. The die is positioned at one end of the pipe, Pressure is applied and at the same time die is slowly turned by turning stock handle
5. Once the threading is started, applying pressure is stopped and die is continued to turn till one thread projects through the die
6. In the same manner the ends of the pipes are threaded and checked with an elbow
7. Then the elbow and tap are fitted and clamped on the wall

Result

Thus the threads cut at the ends of PVC pipe to make plumbing

PIPE LINE TO WASH BASIN

Ex.No: Date

Aim

To prepare a pipe line connection to the wash basin.

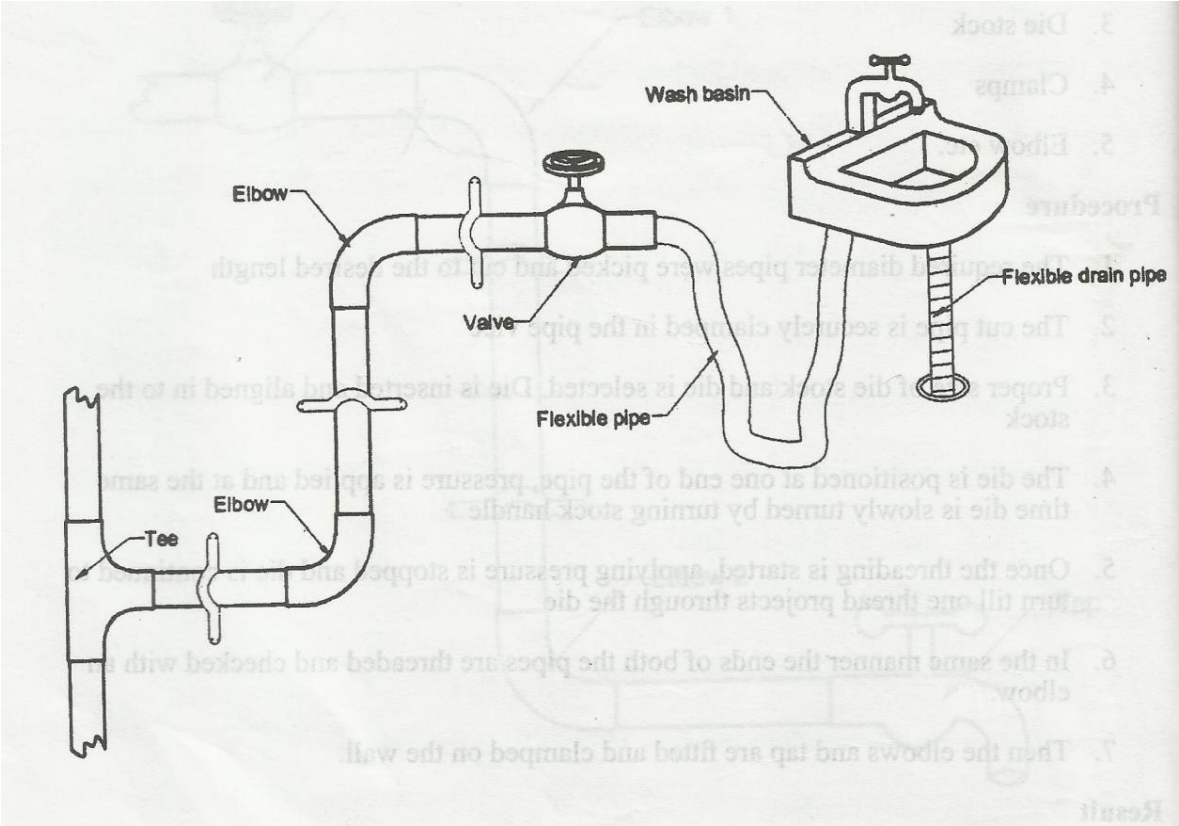

Material Required

1. PVC pipe
2. Elbows
3. Flexible pipe
4. Valve
5. Clamps
6. Wash basin with tap
7. Tee Joint

Tools Required

1. Pipe wrench
2. Hammer
3. Screw driver
4. Hack saw

Procedure

1. Mark location of the wash basin and fix it
2. Fix the wash basin tap in the required position
3. Make the tee and elbow connections in the main pipe line to connect it to the wash basin and taps
4. Fix the gate valve near the water tank
5. Connect all the pipe fittings as per the diagram
6. The water tank was filled with water and the gate valve was opened slowly to supply water into the pipe line
7. The tap were opened to check its function

Result

Thus the pipe line connection to the wash basin is made.

PLUMBING VIVA QUESTIONS

1. How the pipes are specified?
2. Which is the common pipe used nowadays?
3. Which vice used in plumbing?
4. Name any five fittings?
5. What is B.S.P?